# Схемы ЖК телевизоров LG с LED-подсветкой 2013 г. выпуска
# ТВ шасси: LC31A/LD31T (часть 1)
# Модели: 22LN45xx, 26LN45xx

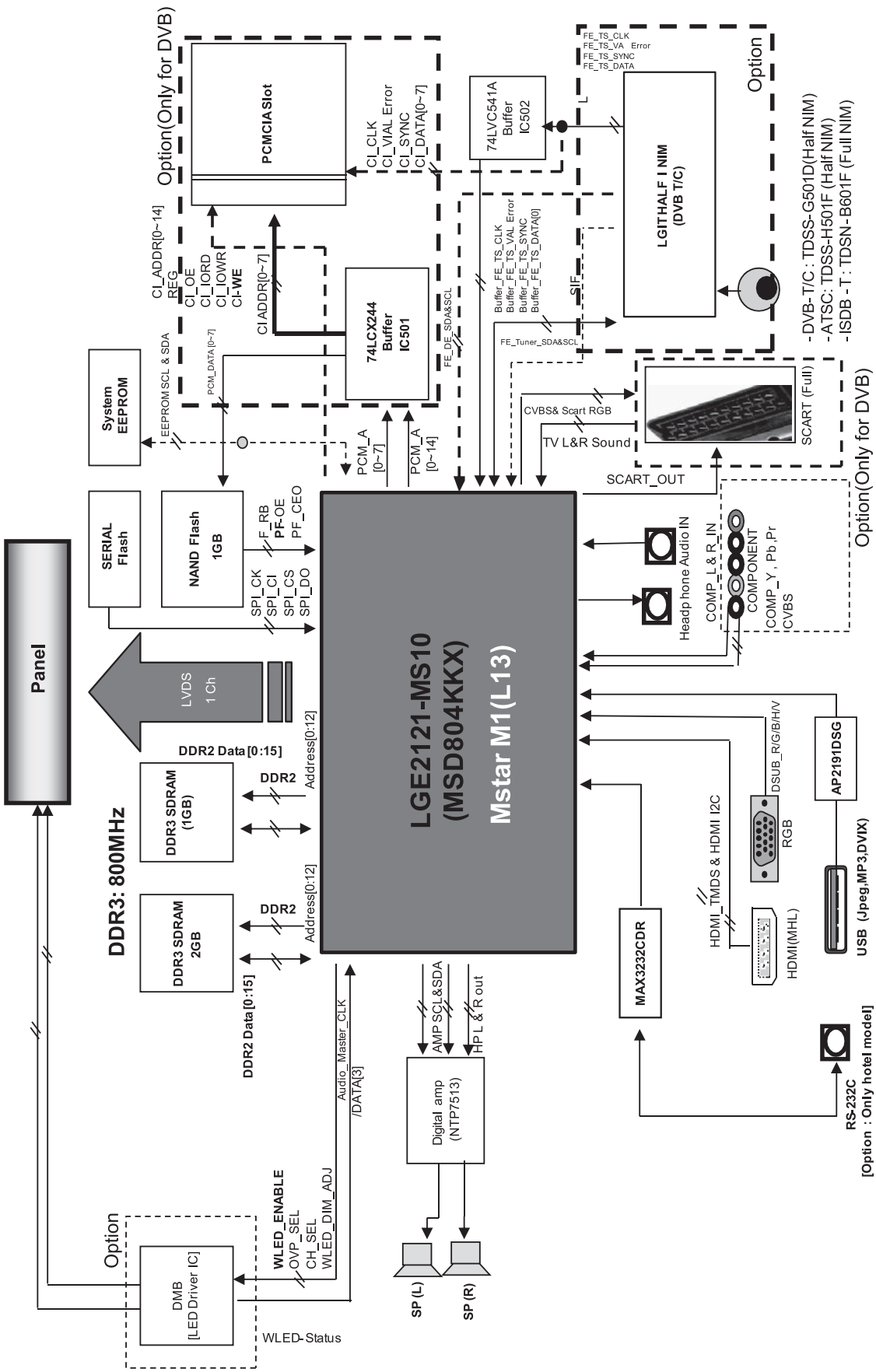


**Блок-схема шасси**

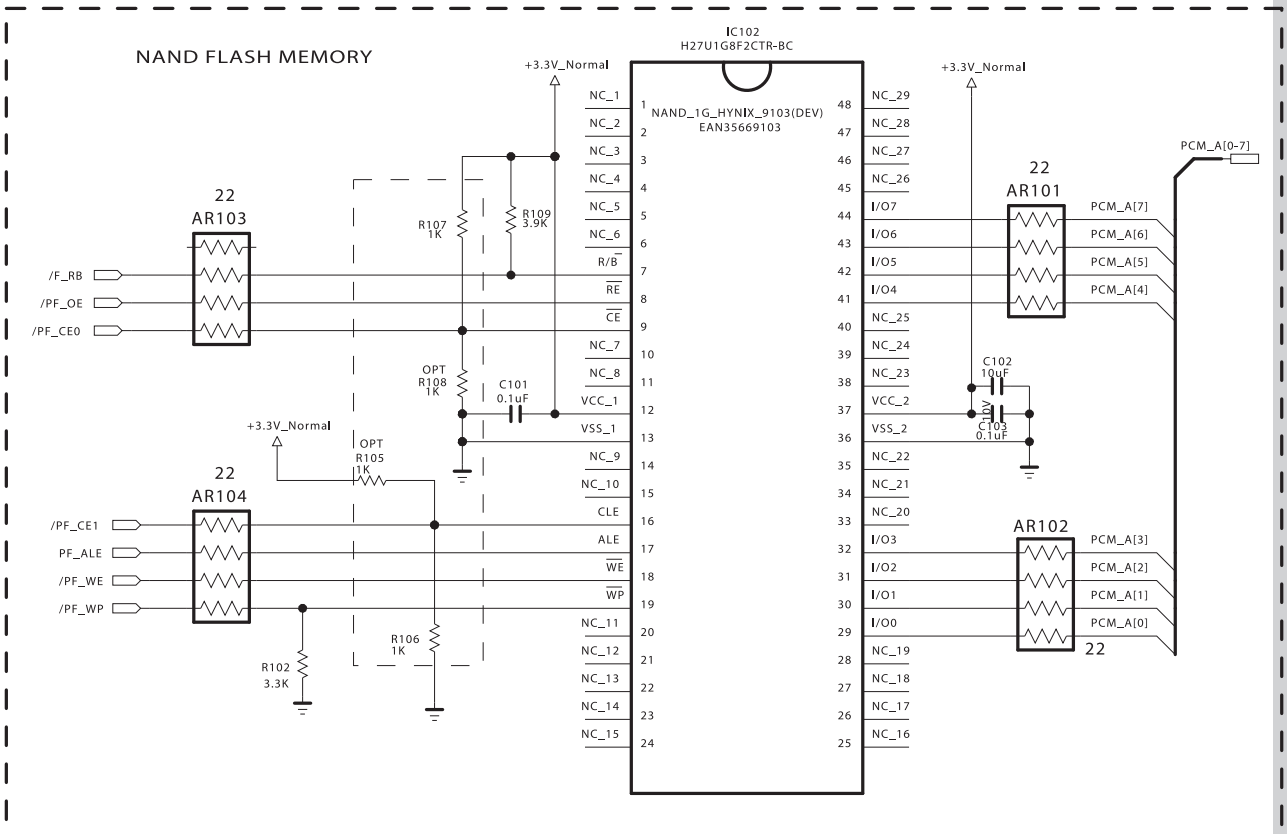
NAND FLASH MEMORY
IC102
H27U1G8F2CTR-BC
NAND_1G_HYNIX_9103(DEV)
EAN35669103
+3.3V_Normal
22
AR103
/F_RB
/PF_OE
/PF_CE0
R107
1K
R109
3.9K
OPT
R108
1K
C101
0.1uF
22
AR104
/PF_CE1
PF_ALE
/PF_WE
/PF_WP
OPT
R105
1K
R106
1K
R102
3.3K
22
AR101
PCM_A[7]
PCM_A[6]
PCM_A[5]
PCM_A[4]
PCM_A[0-7]
C102
10uF
C103
0.1uF
AR102
PCM_A[3]
PCM_A[2]
PCM_A[1]
PCM_A[0]
22
NC_1
NC_2
NC_3
NC_4
NC_5
NC_6
R/B
RE
CE
NC_7
NC_8
VCC_1
VSS_1
NC_9
NC_10
CLE
ALE
WE
WP
NC_11
NC_12
NC_13
NC_14
NC_15
NC_29
NC_28
NC_27
NC_26
I/O7
I/O6
I/O5
I/O4
NC_25
NC_24
NC_23
VCC_2
VSS_2
NC_22
NC_21
NC_20
I/O3
I/O2
I/O1
I/O0
NC_19
NC_18
NC_17
NC_16

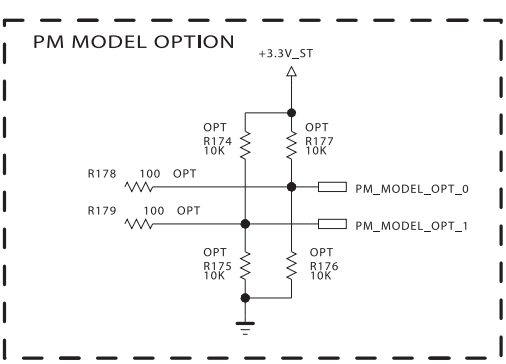
PM MODEL OPTION
+3.3V_ST
OPT
R174
10K
OPT
R177
10K
R178
100
OPT
PM_MODEL_OPT_0
R179
100
OPT
PM_MODEL_OPT_1
OPT
R175
10K
OPT
R176
10K

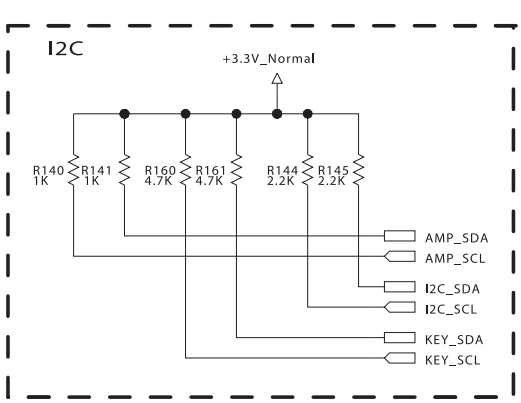
I2C
+3.3V_Normal
R140
1K
R141
1K
R160
4.7K
R161
4.7K
R144
2.2K
R145
2.2K
AMP_SDA
AMP_SCL
I2C_SDA
I2C_SCL
KEY_SDA
KEY_SCL

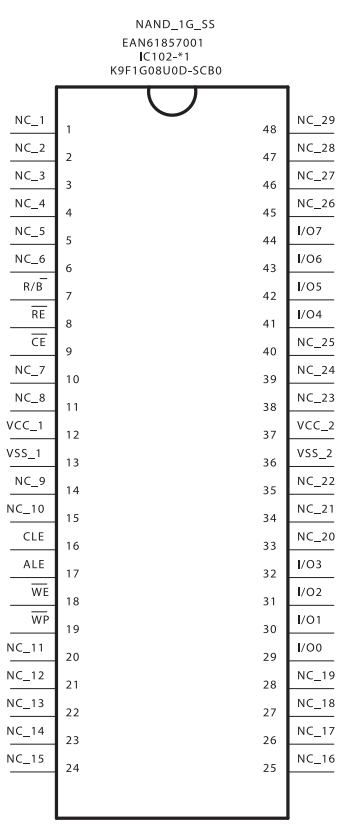
NAND_1G_SS
EAN61857001
IC102-*1
K9F1G08U0D-SCB0
NC_1
NC_2
NC_3
NC_4
NC_5
NC_6
R/B
RE
CE
NC_7
NC_8
VCC_1
VSS_1
NC_9
NC_10
CLE
ALE
WE
WP
NC_11
NC_12
NC_13
NC_14
NC_15
NC_29
NC_28
NC_27
NC_26
I/O7
I/O6
I/O5
I/O4
NC_25
NC_24
NC_23
VCC_2
VSS_2
NC_22
NC_21
NC_20
I/O3
I/O2
I/O1
I/O0
NC_19
NC_18
NC_17
NC_16

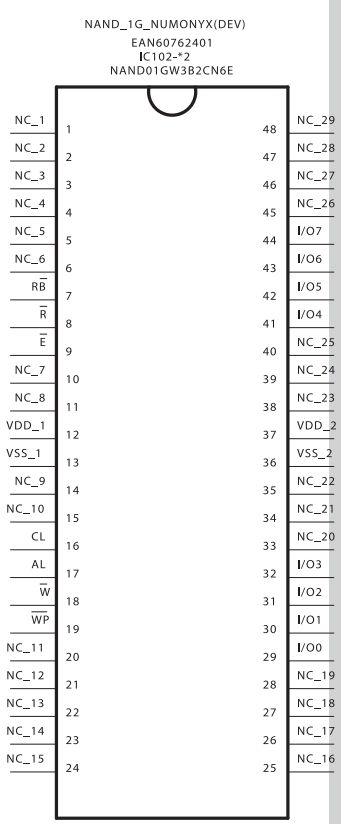
NAND_1G_NUMONYX(DEV)
EAN60762401
IC102-*2
NAND01GW3B2CN6E
NC_1
NC_2
NC_3
NC_4
NC_5
NC_6
RB
R
E
NC_7
NC_8
VDD_1
VSS_1
NC_9
NC_10
CL
AL
W
WP
NC_11
NC_12
NC_13
NC_14
NC_15
NC_29
NC_28
NC_27
NC_26
I/O7
I/O6
I/O5
I/O4
NC_25
NC_24
NC_23
VDD_2
VSS_2
NC_22
NC_21
NC_20
I/O3
I/O2
I/O1
I/O0
NC_19
NC_18
NC_17
NC_16

DIMMING

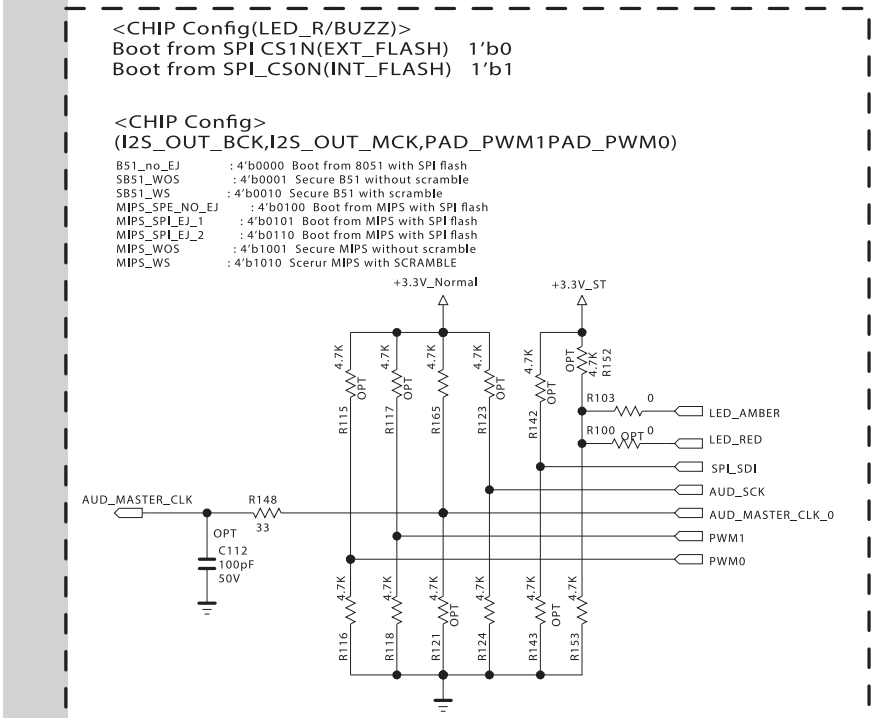


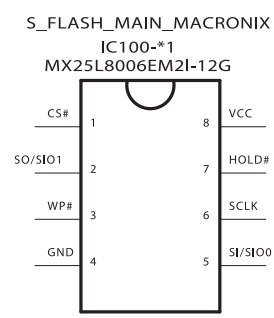


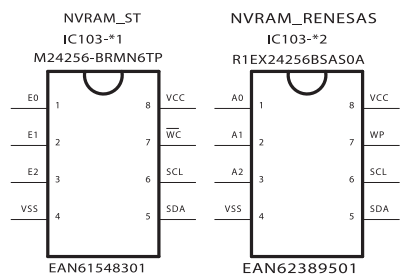


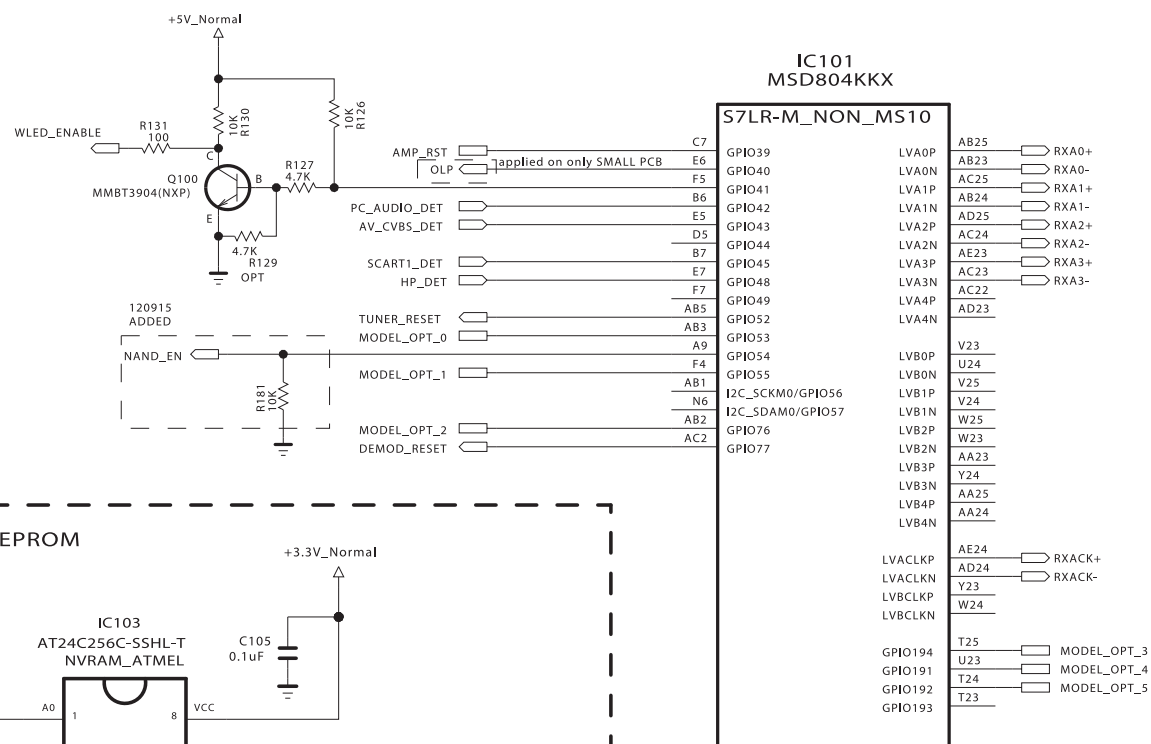


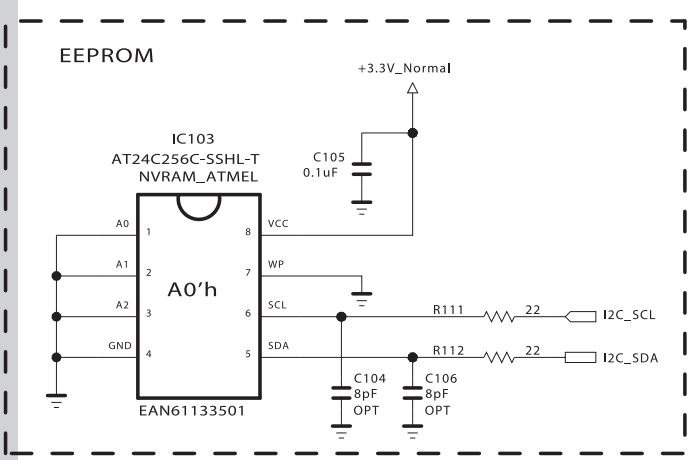


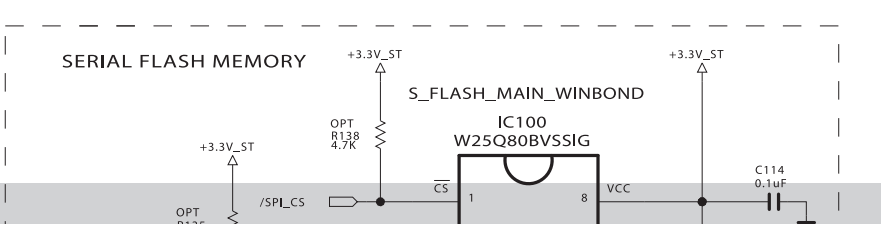


В ПАПКУ РЕМОНТНИКА

LGE2121-NonMS10 (MSD804KKX)
: EAN62651201 (KR/US REGION)

LGE2121-MS10 (MSD804KKX)
: EAN62674101 (NON_KR/US REGION)

S7LR-M_MS10
IC101-*1
LGE2121-MS (M1_L13_MS10)

| | |
|---|---|
| W21 | PCMDATA[0]/GPIO129 |
| AA18 | PCMDATA[1]/GPIO130 |
| AB22 | PCMDATA[2]/GPIO131 |
| AE20 | PCMDATA[3]/GPIO123 |
| AA15 | PCMDATA[4]/GPIO122 |
| AE21 | PCMDATA[5]/GPIO121 |
| AB21 | PCMDATA[6]/GPIO120 |
| Y15 | PCMDATA[7]/GPIO119 |
| W20 | PCMADR[0]/GPIO128 |
| V20 | PCMADR[1]/GPIO127 |
| W22 | PCMADR[2]/GPIO125 |
| AB18 | PCMADR[3]/GPIO124 |
| AA20 | PCMADR[4]/GPIO102 |
| AA21 | PCMADR[5]/GPIO104 |
| Y19 | PCMADR[6]/GPIO105 |
| AB17 | PCMADR[7]/GPIO106 |
| Y16 | PCMADR[8]/GPIO111 |
| AB19 | PCMADR[9]/GPIO113 |
| AB20 | PCMADR[10]/GPIO117 |
| AA16 | PCMADR[11]/GPIO115 |
| AA19 | PCMADR[12]/GPIO107 |
| AC21 | PCMADR[13]/GPIO110 |
| AA17 | PCMADR[14]/GPIO109 |
| Y20 | PCMREG_N/GPIO126 |
| AB15 | PCMOE_N/GPIO116 |
| AA22 | PCMWE_N/GPIO195 |
| AD22 | PCMIORD_N/GPIO114 |
| AD20 | PCMIOWR_N/GPIO112 |
| AD21 | PCMCE_N/GPIO118 |
| AC20 | PCMIRQA_N/GPIO108 |
| Y18 | PCMCD_N/GPIO133 |
| Y21 | PCMWAIT_N/GPIO103 |
| Y22 | PCM_RESET/GPIO132 |
| U21 | PCM2_CE_N/GPIO134 |
| V21 | PCM2_IRQA_N/GPIO135 |
| R20 | PCM2_CD_N/GPIO138 |
| T20 | PCM2_WAIT_N/GPIO136 |
| U22 | PCM2_RESET/GPIO137 |
| D4 | UART1_TX/GPIO46 |
| E4 | UART1_RX/GPIO47 |
| N25 | UART2_TX/GPIO68 |
| N24 | UART2_RX/GPIO67 |
| B8 | UART3_TX/GPIO50 |
| A8 | UART3_RX/GPIO51 |
| P23 | I2C_SCKM2/DDCR_CK/GPIO75 |
| P24 | I2C_SDAM2/DDCR_DA/GPIO74 |
| D2 | DDCA_DA/UART0_TX |
| D1 | DDCA_CK/UART0_RX |
| P21 | PWM0/GPIO69 |
| N23 | PWM1/GPIO70 |
| P22 | PWM2/GPIO71 |
| R21 | PWM3/GPIO72 |
| P20 | PWM4/GPIO73 |
| F6 | PWM_PM/GPIO197 |
| H6 | SAR0/GPIO34 |
| G5 | SAR1/GPIO35 |
| G4 | SAR2/GPIO36 |
| J5 | SAR3/GPIO37 |
| J4 | SAR4/GPIO38 |
| R23 | VSYNC_LIKE/GPIO146 |
| R24 | SPI1_CK/GPIO199 |
| R25 | SPI1_DI/GPIO200 |
| T21 | SPI2_CK/GPIO201 |
| T22 | SPI2_DI/GPIO202 |

| | |
|---|---|
| NF_CE1Z/GPIO141 | AE18 |
| NF_WPZ/GPIO196 | AC17 |
| NF_CEZ/GPIO140 | AD18 |
| NF_CLE/GPIO139 | AC18 |
| NF_REZ/GPIO142 | AC19 |
| NF_WEZ/GPIO143 | AD17 |
| NF_ALE/GPIO144 | AE17 |
| NF_RBZ/GPIO145 | AD19 |
| GPIO_PM[0]/GPIO6 | H5 |
| PM_UART_TX/GPIO_PM[1]/GPIO7 | K6 |
| GPIO_PM[2]/GPIO8 | K5 |
| GPIO_PM[3]/GPIO9 | J6 |
| GPIO_PM[4]/GPIO10 | K4 |
| PM_UART_RX/GPIO_PM[5]/GPIO11 | L6 |
| PM_SPI_SCZ1/GPIO_PM[6]/GPIO12 | C2 |
| GPIO_PM[7]/GPIO13 | L5 |
| GPIO_PM[8]/GPIO14 | M6 |
| GPIO_PM[9]/GPIO15 | M5 |
| PM_SPI_SCZ2/GPIO_PM[10]/GPIO16 | C1 |
| GPIO_PM[11]/GPIO17 | M4 |
| PM_SPI_SCK/GPIO1 | A2 |
| PM_SPI_CZ0/GPIO_PM[12]/GPIO0 | D3 |
| PM_SPI_SDI/GPIO2 | B2 |
| PM_SPI_SDO/GPIO3 | B1 |
| TS0CLK/GPIO90 | Y14 |
| TS0VALID/GPIO88 | AA10 |
| TS0SYNC/GPIO89 | Y12 |
| TS0DATA_[0]/GPIO80 | Y13 |
| TS0DATA_[1]/GPIO81 | Y11 |
| TS0DATA_[2]/GPIO82 | AA12 |
| TS0DATA_[3]/GPIO83 | AB12 |
| TS0DATA_[4]/GPIO84 | AA14 |
| TS0DATA_[5]/GPIO85 | AB14 |
| TS0DATA_[6]/GPIO86 | AA13 |
| TS0DATA_[7]/GPIO87 | AB11 |
| TS1CLK/GPIO101 | AC15 |
| TS1VALID/GPI99 | AD15 |
| TS1SYNC/GPIO100 | AC16 |
| TS1DATA_[0]/GPIO91 | AD16 |
| TS1DATA_[1]/GPIO92 | AE15 |
| TS1DATA_[2]/GPIO93 | AE14 |
| TS1DATA_[3]/GPIO94 | AC13 |
| TS1DATA_[4]/GPIO95 | AC14 |
| TS1DATA_[5]/GPIO96 | AD12 |
| TS1DATA_[6]/GPIO97 | AD13 |
| TS1DATA_[7]/GPIO98 | AD14 |

BLU_CURRENT_CTL
WLED_DIM_ADJ
C100 1uF OPT
C111 2.2uF
PCM_D[0-7]
PCM_A[0-14]
/PCM_REG
/PCM_OE
/PCM_WE
/PCM_IORD
/PCM_IOWR
/PCM_CE
/PCM_IRQA
/PCM_CD
/PCM_WAIT
PCM_RST
USB_OCD
USB_CTL
PCM_5V_CTL
120917 Changed
/MHL_OCP_DET
MHL_OCP_EN
PM_TXD
PM_RXD
MODEL_OPT_6
MODEL_OPT_7
for SYSTEM EEPROM (IC104)
I2C_SCL
I2C_SDA
RGB_DDC_SDA
RGB_DDC_SCL
PWM0
PWM1
PWM2
SCART1_MUTE
ERROR_OUT
LED_AMBER
KEY1
KEY2
2011.11.15 WalkieTalkie Issue
KEY_SCL R101
KEY_SDA R163
LED_RED R164

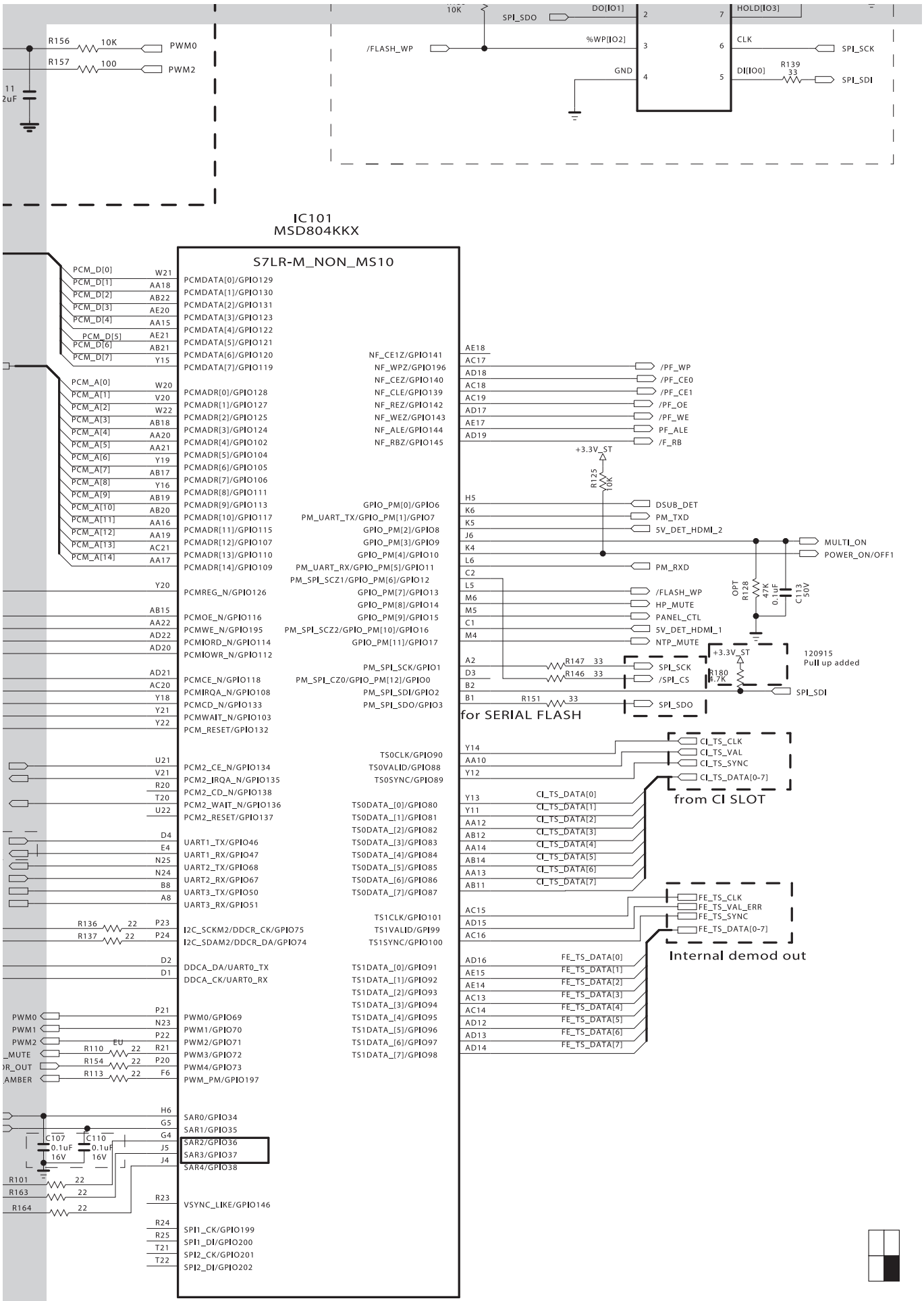


**Процессор LGE 2121-MS10 (1/3)**

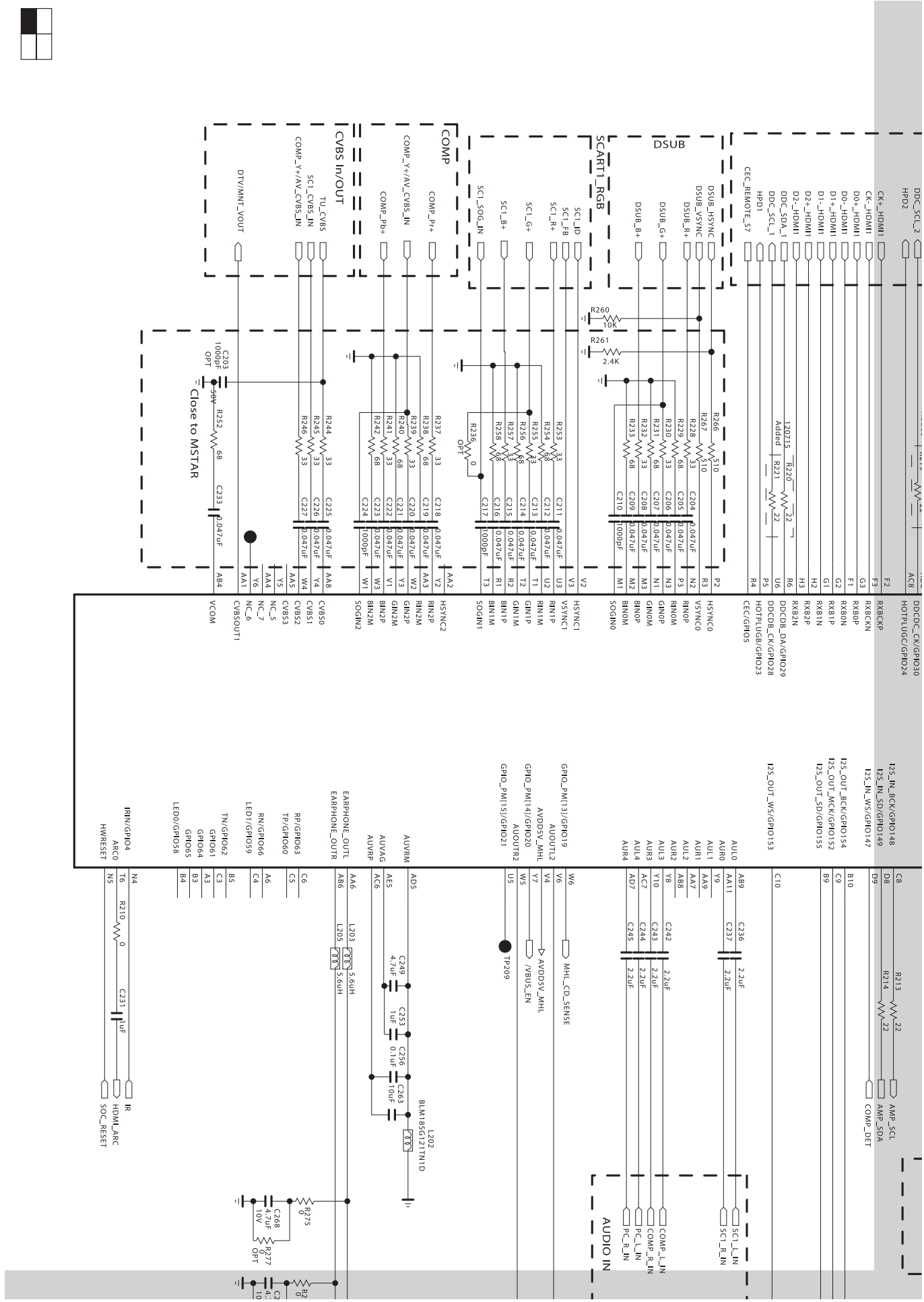
DSUB
SCART1_RGB
COMP
CVBS In/OUT
Close to MSTAR
AUDIO IN

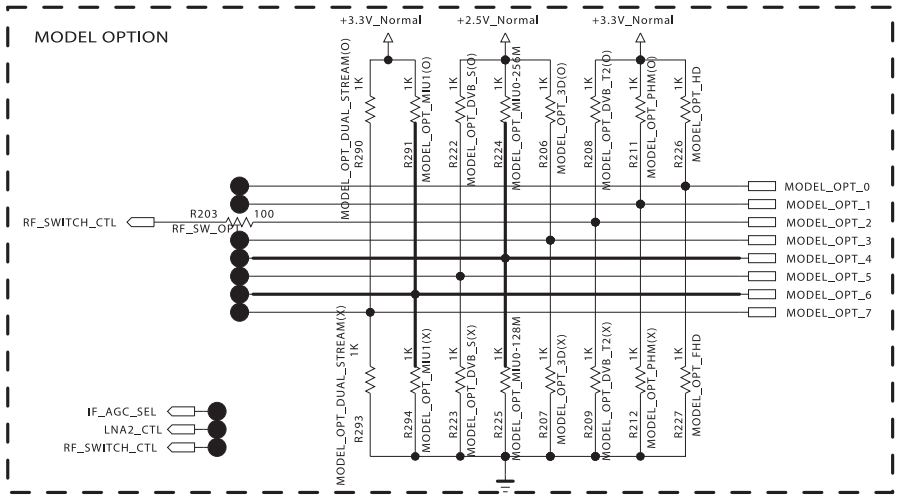


## MODEL OPTION

| PIN NAME | PIN NO. | LOW | HIGH |
|---|---|---|---|
| MODEL_OPT_0 | AB3 | FHD | HD |
| MODEL_OPT_1 | F4 | PHM_OFF | PHM_ON |
| MODEL_OPT_2 | AB2 | NON_DVB_T2 | DVB_T2 |
| MODEL_OPT_3 | T25 | NON_3D | 3D |
| MODEL_OPT_4 | U23 | MIU0-128M | MIU0-256M |
| MODEL_OPT_5 | T24 | NON_DVB_S | DVB_S |
| MODEL_OPT_6 | B8 | MIU1-NO_DDR | MIU1-128M |
| MODEL_OPT_7 | A8 | NON_DualStream | DualStream |

* Dual Stream is only Korea 3D spec

## MEMORY OPTION

| Memory | Model OPT 4 |
|---|---|
| 128M | 0 |
| 128M+128M | 0 |
| 256M | 1 |
| 256M+128M | 1 |

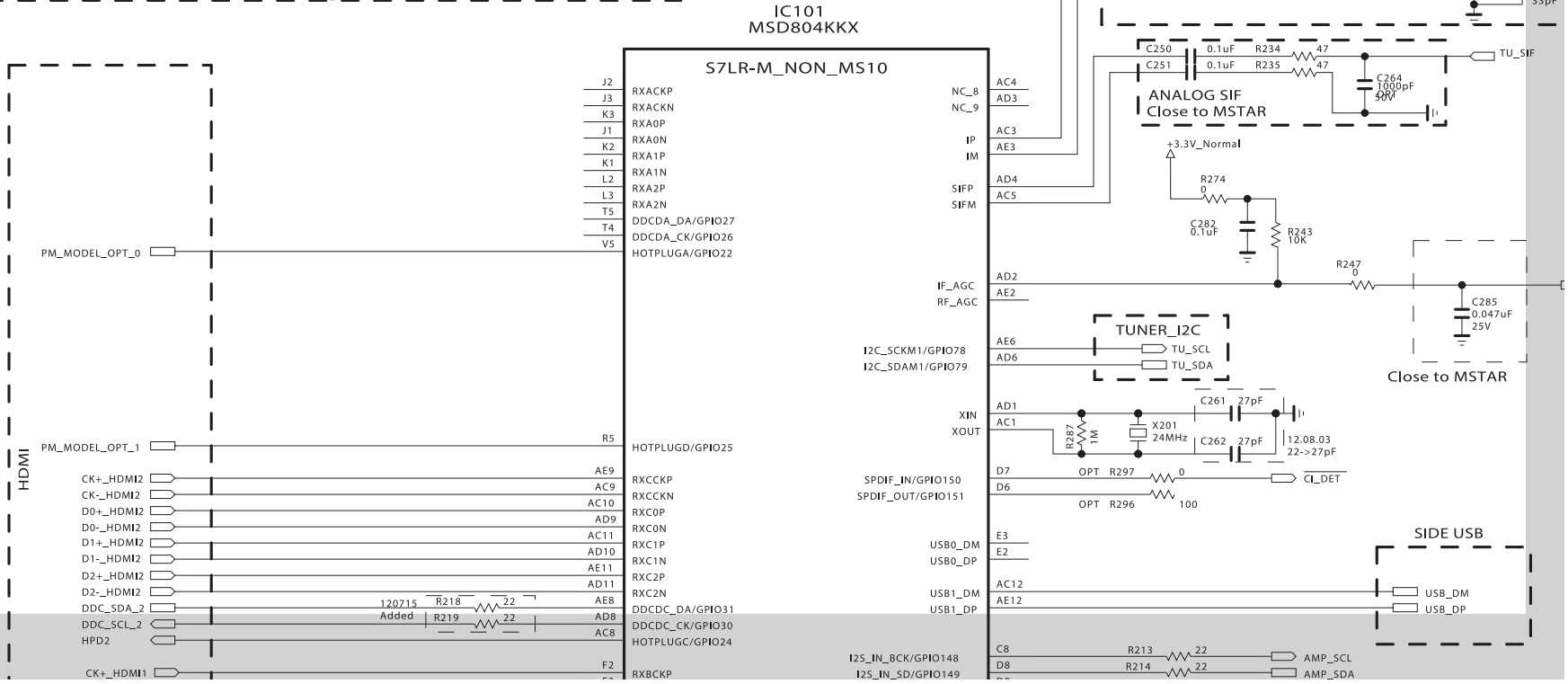

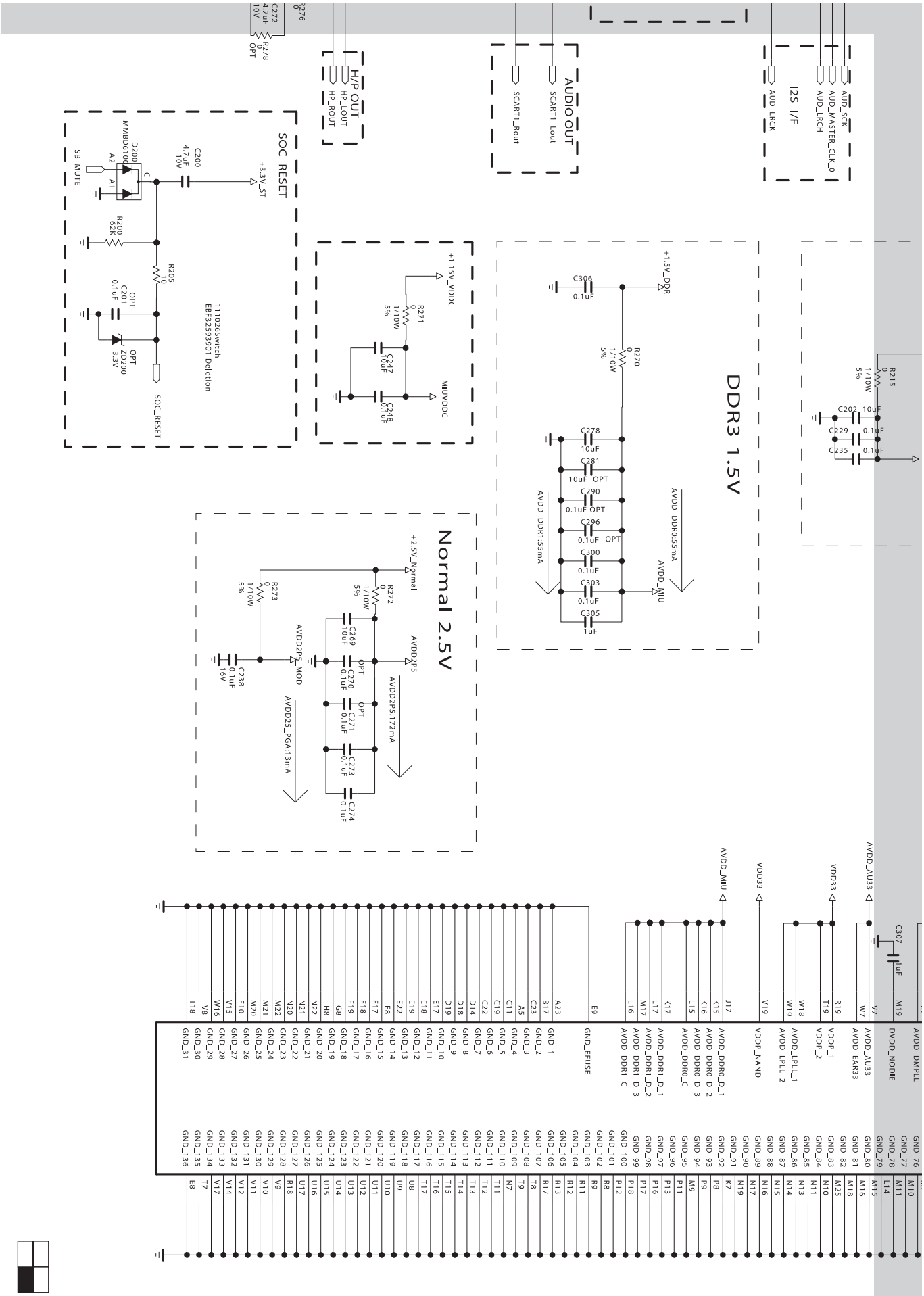
I2S_I/F
AUD_SCK
AUD_MASTER_CLK_0
AUD_LRCH
AUD_LRCK
AUDIO OUT
SCART1_Lout
SCART1_Rout
H/P OUT
HP_LOUT
HP_ROUT
R276 0
C272 4.7uF 10V
R278 0 OPT
SOC_RESET
+3.3V_ST
C200 4.7uF 10V
D200 MMBD6100
A2
A1
C
SB_MUTE
R200 62K
R205 10
C201 0.1uF
OPT
ZD200 3.3V
1110126Switch
EBF32593901 Deletion
SOC_RESET
+1.15V_VDDC
R271 0 1/10W 5%
C247 10uF
C248 0.1uF
MIUVDDC
DDR3 1.5V
+1.5V_DDR
C306 0.1uF
R270 0 1/10W 5%
C278 10uF
C281 10uF OPT
C290 0.1uF OPT
C296 0.1uF OPT
C300 0.1uF
C303 0.1uF
C305 1uF
AVDD_DDR0:55mA
AVDD_DDR1:55mA
AVDD_MIU
R215 0 1/10W 5%
C202 10uF
C229 0.1uF
C235 0.1uF
Normal 2.5V
+2.5V_Normal
R272 0 1/10W 5%
C269 10uF
OPT C270 0.1uF
OPT C271 0.1uF
C273 0.1uF
C274 0.1uF
AVDD2P5
AVDD2P5:172mA
R273 0 1/10W 5%
C238 0.1uF 16V
AVDD2P5_MOD
AVDD25_PGA:13mA
C307 1uF
AVDD_DMPLL
DVDD_NODIE
AVDD_AU33
AVDD_EAR33
VDD33
VDDP_1
VDDP_2
AVDD_LPLL_1
AVDD_LPLL_2
VDDP_NAND
AVDD_MIU
AVDD_DDR0_D_1
AVDD_DDR0_D_2
AVDD_DDR0_D_3
AVDD_DDR0_C
AVDD_DDR1_D_1
AVDD_DDR1_D_2
AVDD_DDR1_D_3
AVDD_DDR1_C
GND_EFUSE

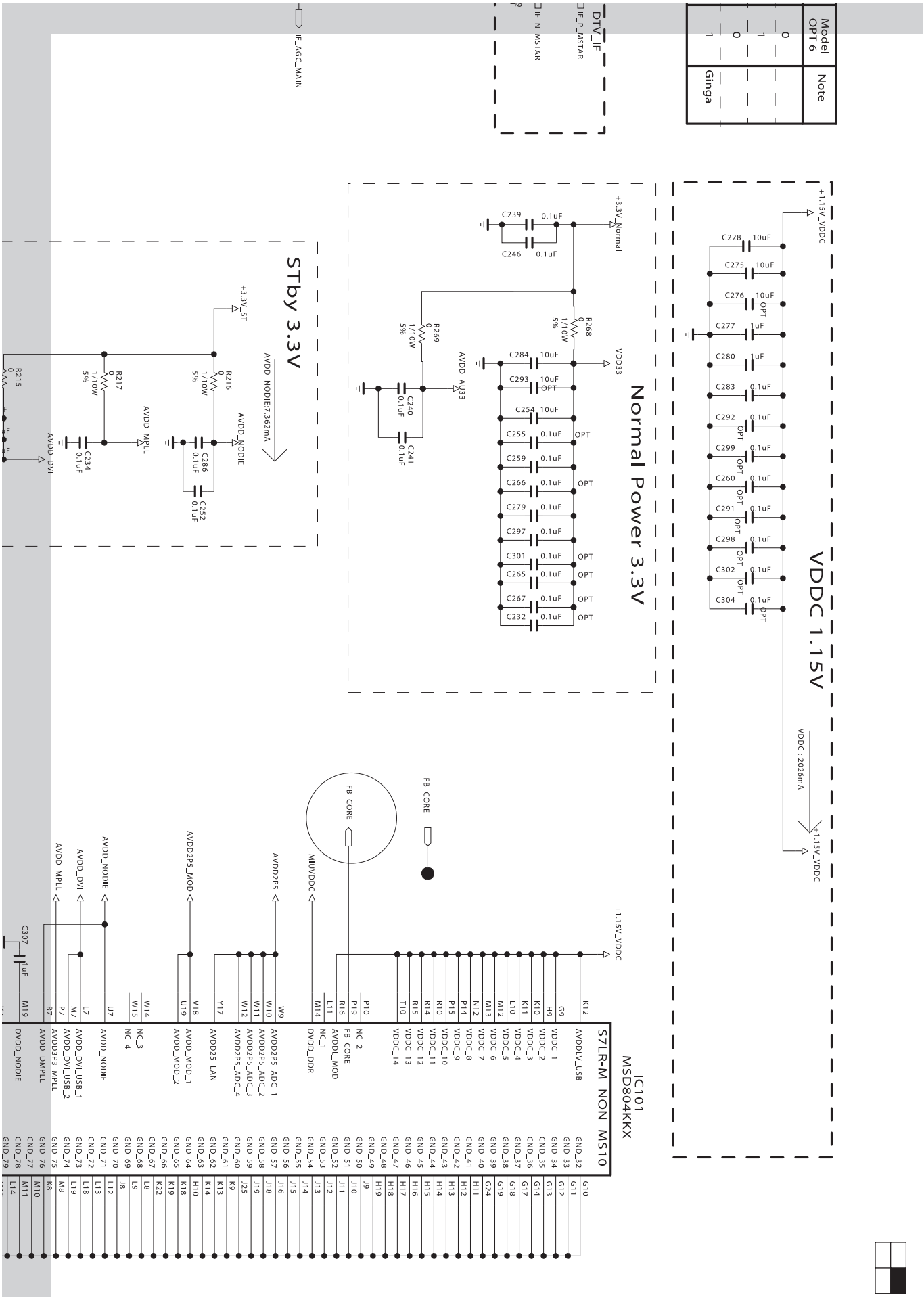


**Процессор LGE 2121-MS10 (3/3)**

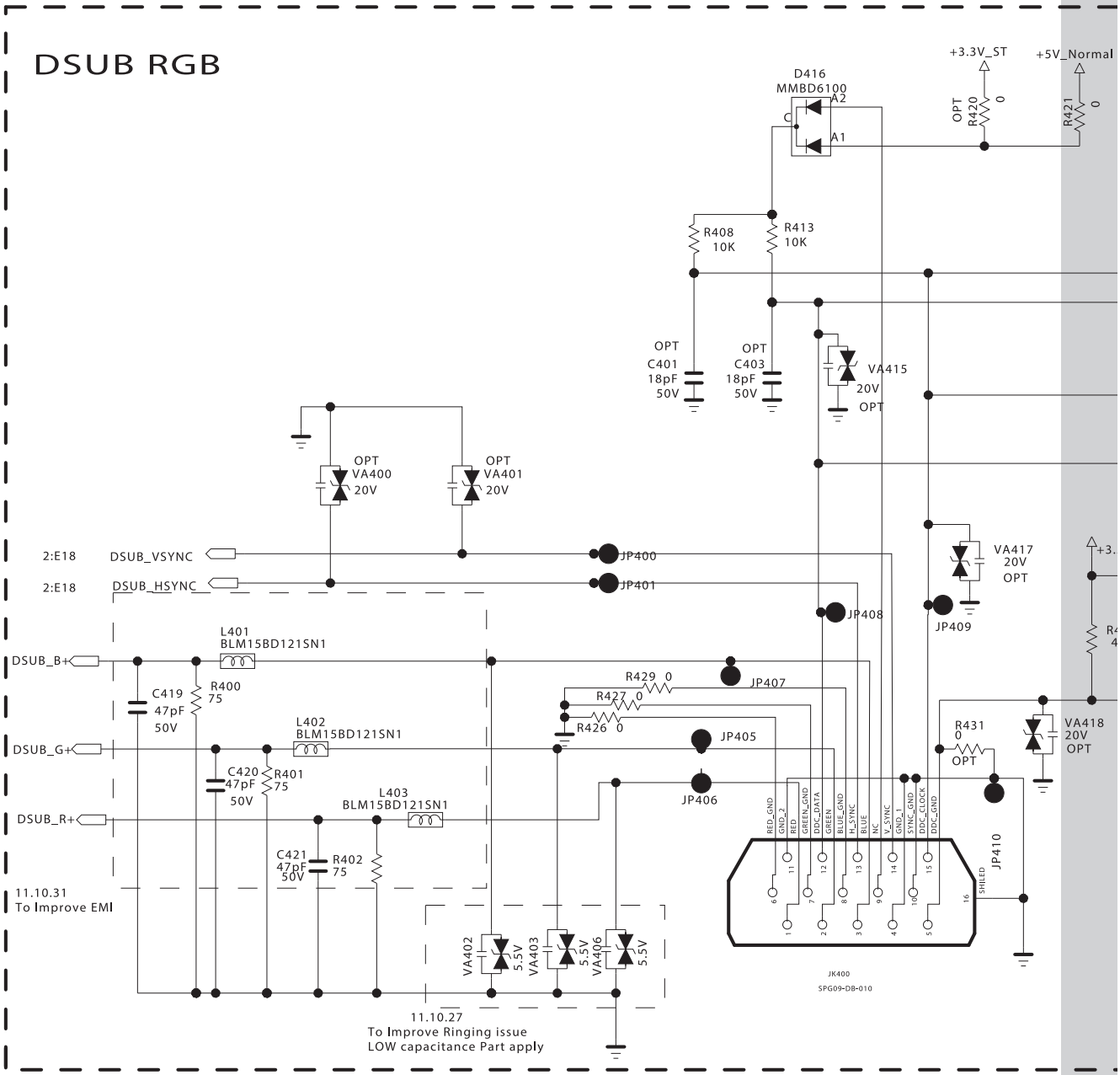
DSUB RGB
+3.3V_ST
+5V_Normal
D416
MMBD6100
A2
C
A1
OPT
R420
0
R421
0
R408
10K
R413
10K
OPT
C401
18pF
50V
OPT
C403
18pF
50V
VA415
20V
OPT
OPT
VA400
20V
OPT
VA401
20V
2:E18
DSUB_VSYNC
2:E18
DSUB_HSYNC
JP400
JP401
JP408
VA417
20V
OPT
JP409
L401
BLM15BD121SN1
DSUB_B+
C419
47pF
50V
R400
75
R429 0
JP407
R427 0
R426 0
L402
BLM15BD121SN1
DSUB_G+
JP405
R431
0
OPT
VA418
20V
OPT
C420
47pF
50V
R401
75
JP406
L403
BLM15BD121SN1
DSUB_R+
C421
47pF
50V
R402
75
11.10.31
To Improve EMI
VA402
5.5V
VA403
5.5V
VA406
5.5V
11.10.27
To Improve Ringing issue
LOW capacitance Part apply
JP410
JK400
SPG09-DB-010

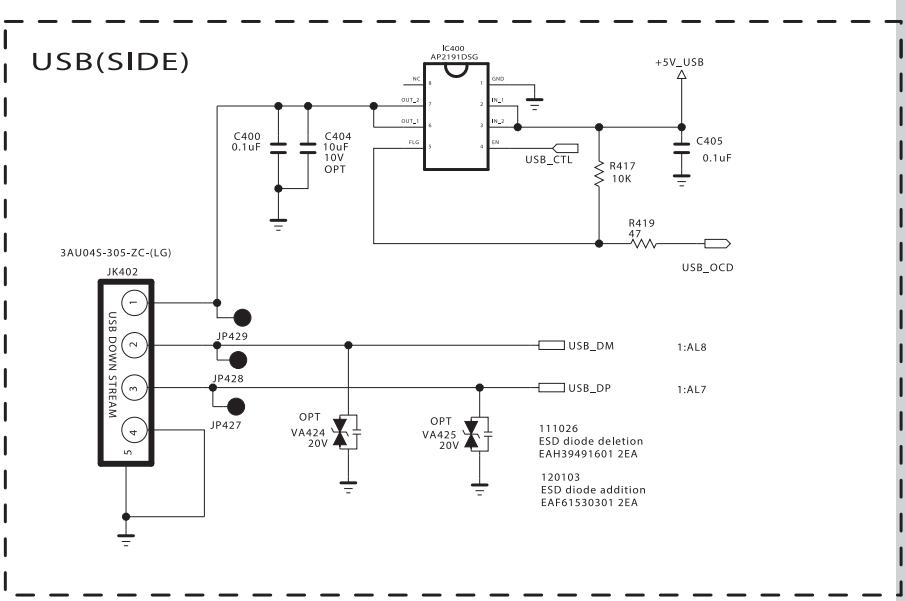
USB(SIDE)
IC400
AP2191DSG
+5V_USB
C400
0.1uF
C404
10uF
10V
OPT
USB_CTL
R417
10K
C405
0.1uF
R419
47
USB_OCD
3AU04S-305-ZC-(LG)
JK402
USB DOWN STREAM
JP429
JP428
JP427
USB_DM
1:AL8
USB_DP
1:AL7
OPT
VA424
20V
OPT
VA425
20V
111026
ESD diode deletion
EAH39491601 2EA
120103
ESD diode addition
EAF61530301 2EA

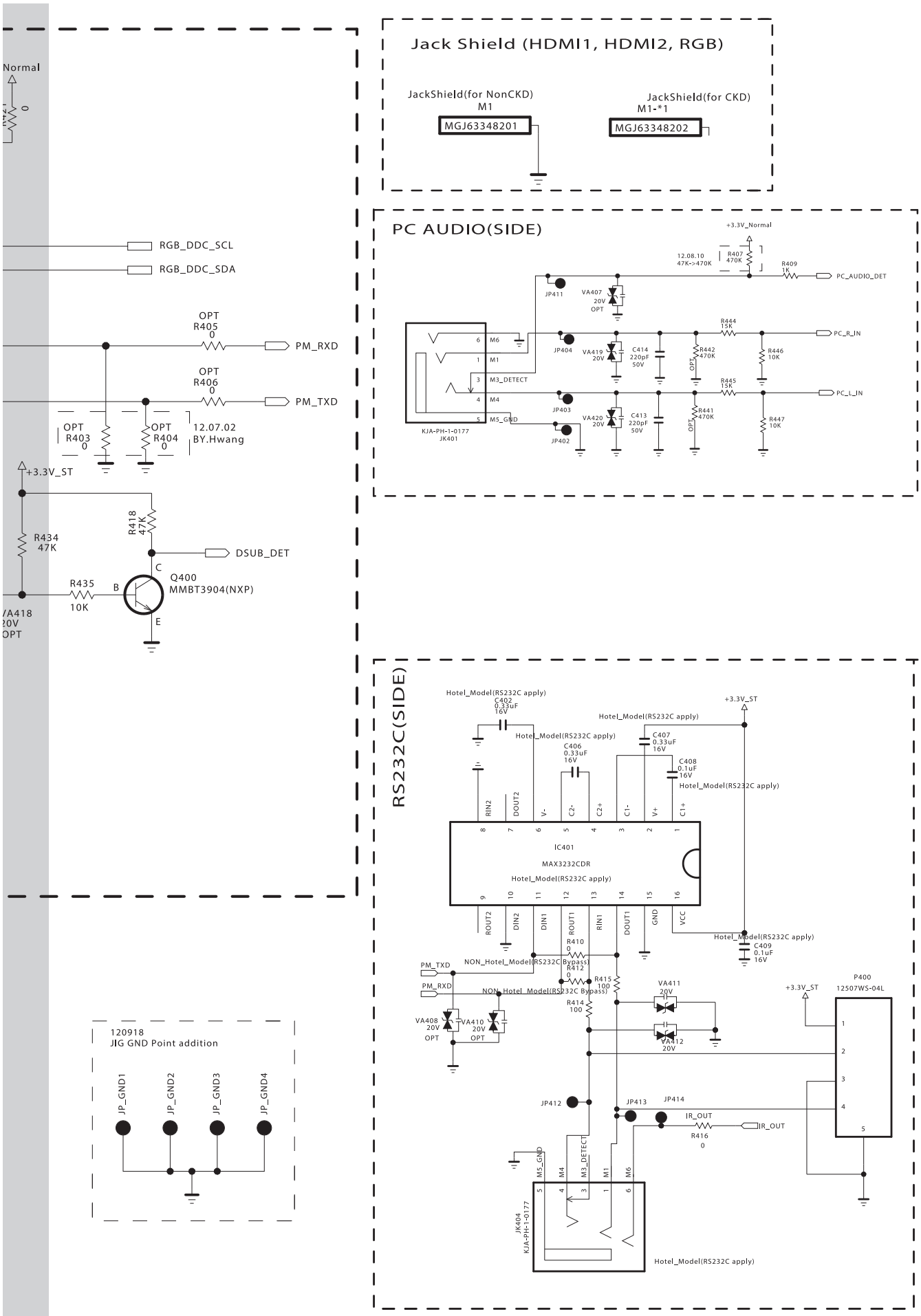


**Разъемы интерфейсов VGA (DSUB), USB, RS-232, PC AUDIO**

*Продолжение на странице XVI*

*Окончание. Начало на страницах I-XI*



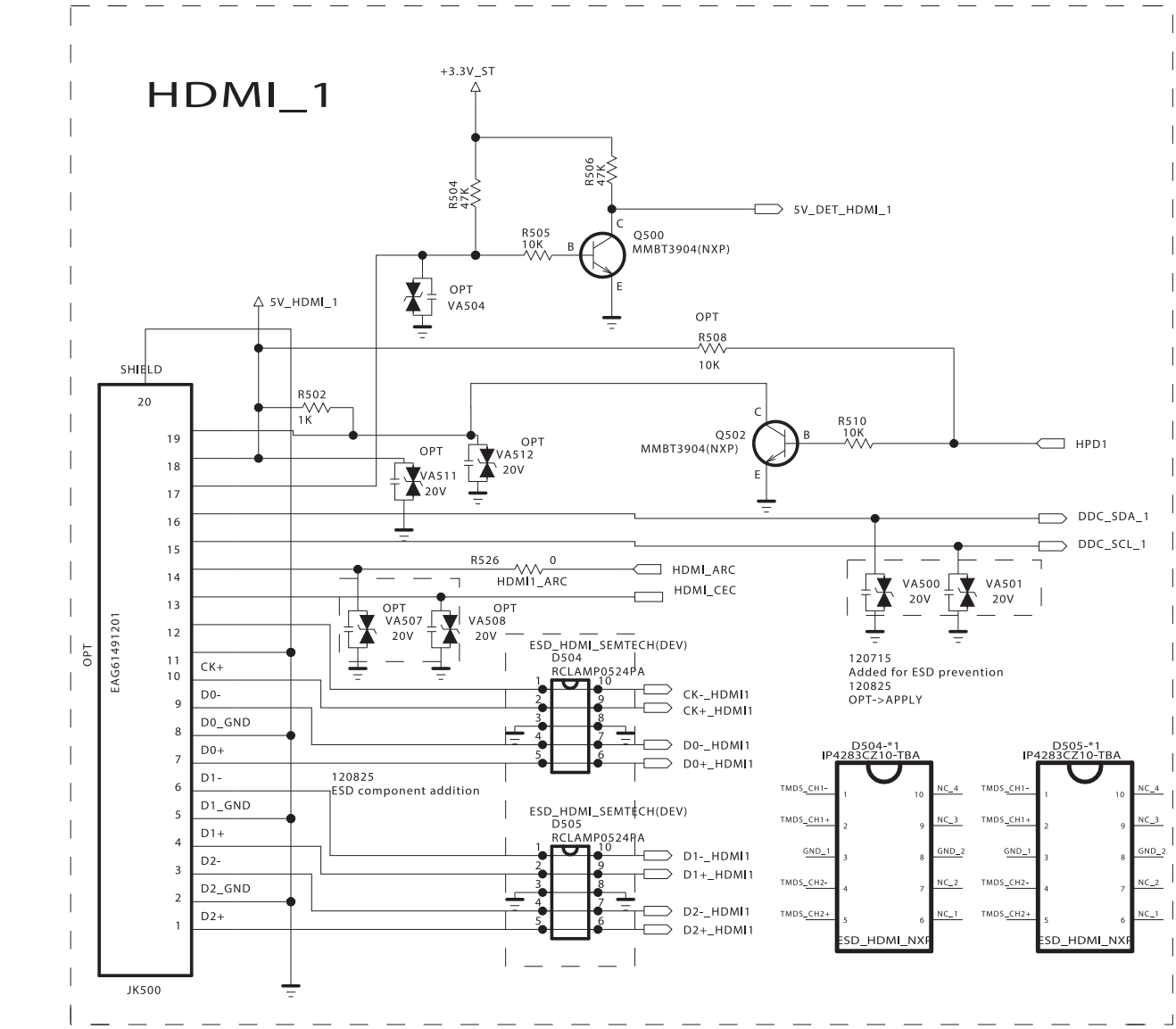


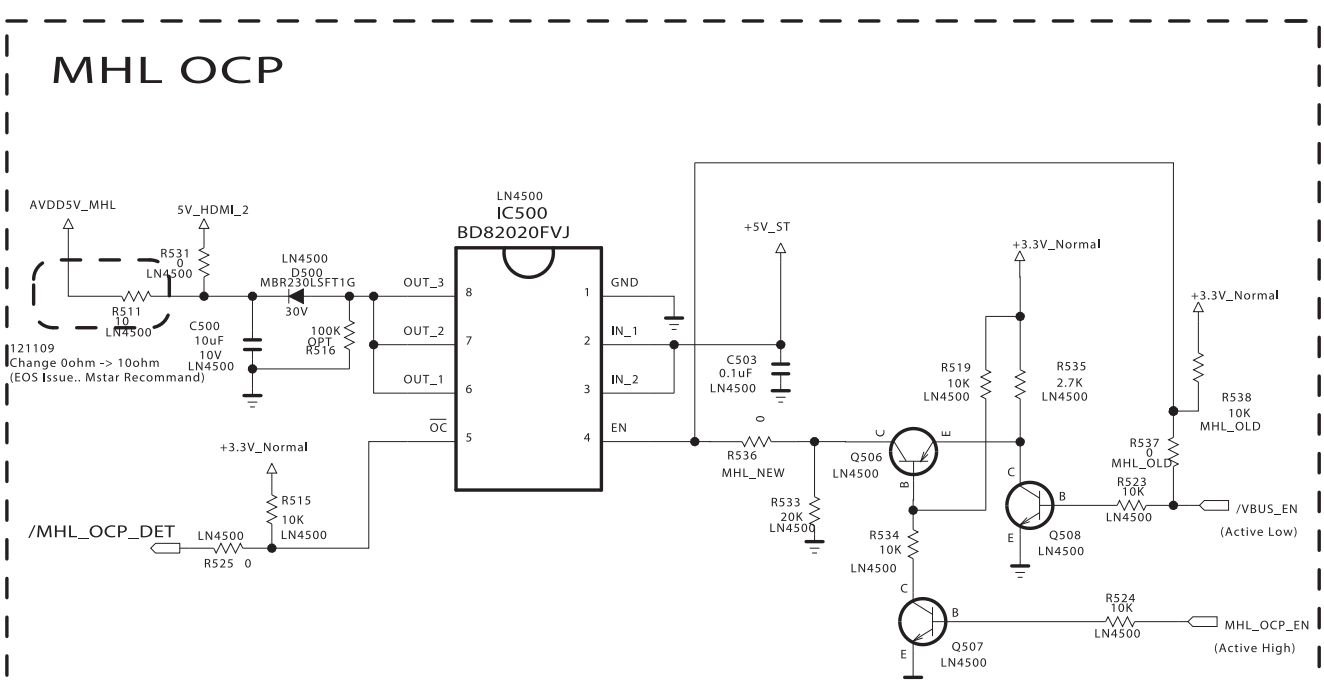


**Разъем интерфейса HDMI**

# Схемы ЖК телевизоров LG с LED-подсветкой 2013 г. выпуска
# ТВ шасси: LC31A/LD31T (часть 2)
# Модели: 22LN45xx, 26LN45xx

*Продолжение. Начало в P&C №5, 2018 г.*



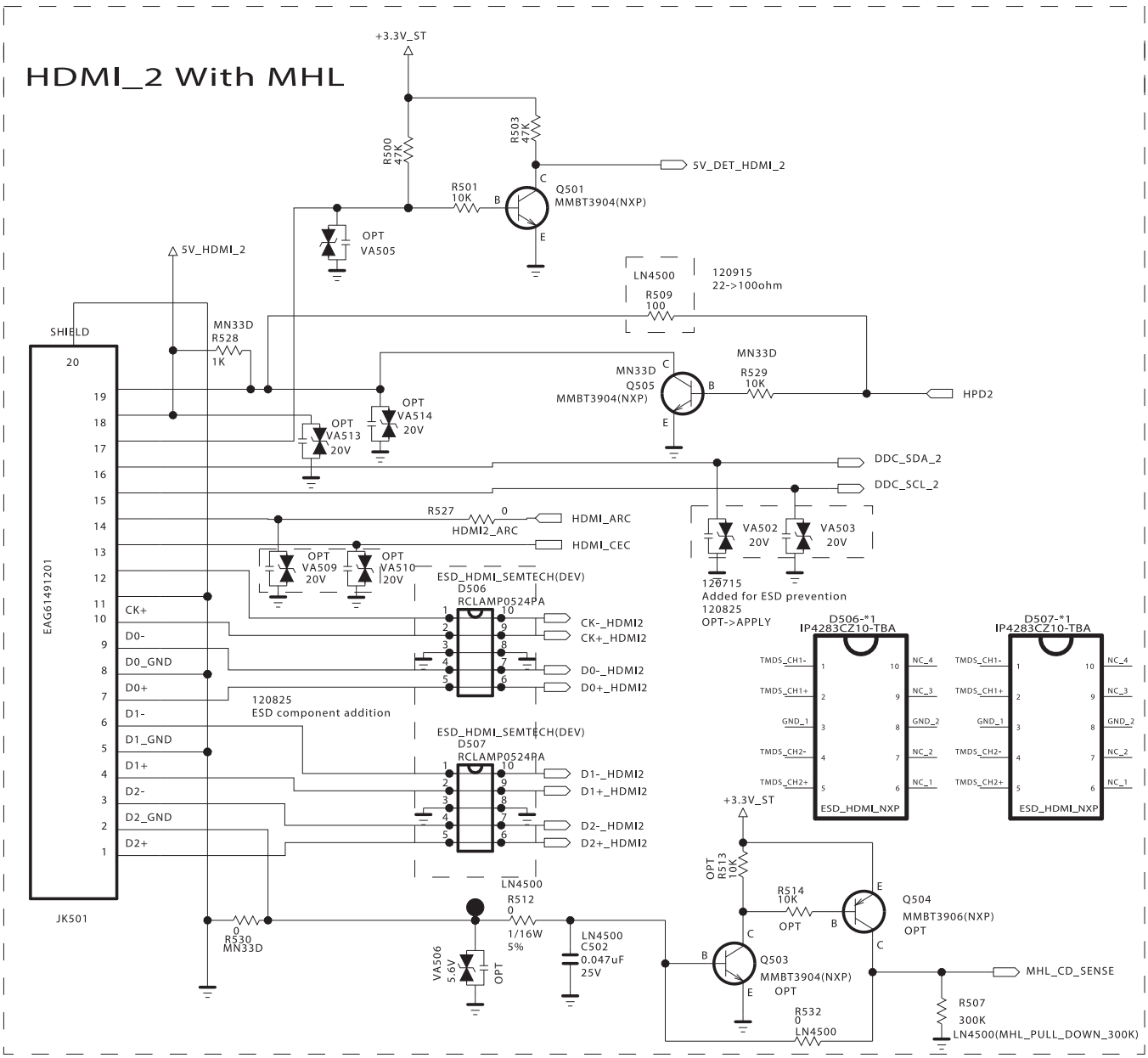


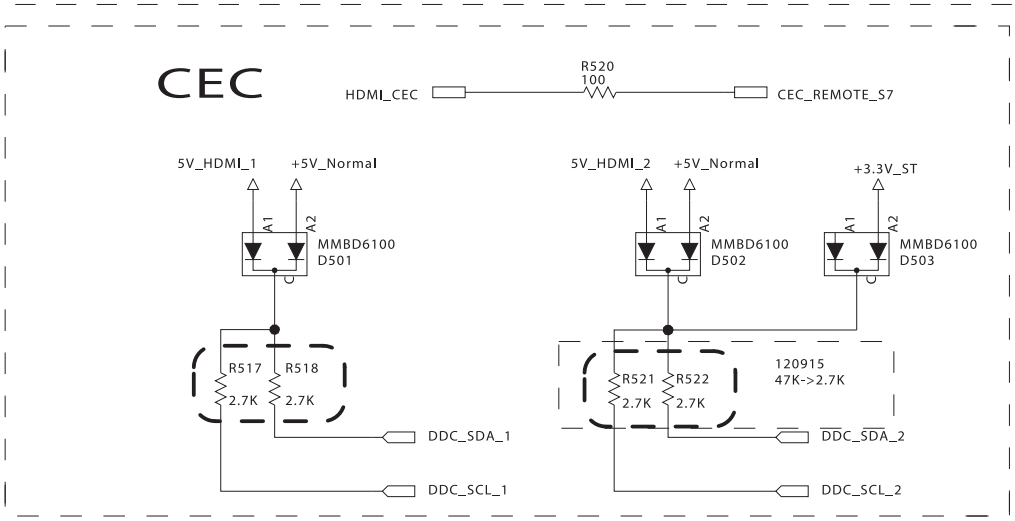


**Разъем интерфейса HDMI-2**

## IR/LED and Control

+3.3V_ST
KEY2
KEY1
KEY_SCL
KEY_SDA
R616 3.3K
R617 3.3K
R614 100
R615 100
L600 BLM18PG121S
+3.3V_ST
+3.3V_ST
Amber LED setting : 9.6mA
R604 270
R610 330
120915
RED LED setting
: 9.6->7.9mA
R600 10K
LED_RED
B
C
E
Q600
MMBT3904(NXP)
R601 10K
(IR Port protection against ESD)
121018
100ohm->200ohm
R630 200
IR
+3.3V_ST
C600 0.1uF 50V
D600 20V
C601 1000pF 50V
D601 20V
OPT C602 1000pF 50V
OPT C603 100pF 50V
OPT D602 20V
R602 10K
LED_AMBER
B
C
E
Q601
MMBT3904(NXP)
R603 10K
12.07.1
Change

## IR_OUT(Ready)

+3.3V_ST
IR_OUT
R619 10K
R618 22
IR_OUT
IR_OUT
OPT R620 0
+3.3V_ST
C
B
E
Q602
MMBT3904(NXP)
IR_OUT
IR_OUT
R621 10K
R622 10K
IR_OUT
C604 1000pF
IR_OUT
C
B
E
Q603
MMBT3904(NXP)
IR_OUT
R623 47K
IR_OUT
IR

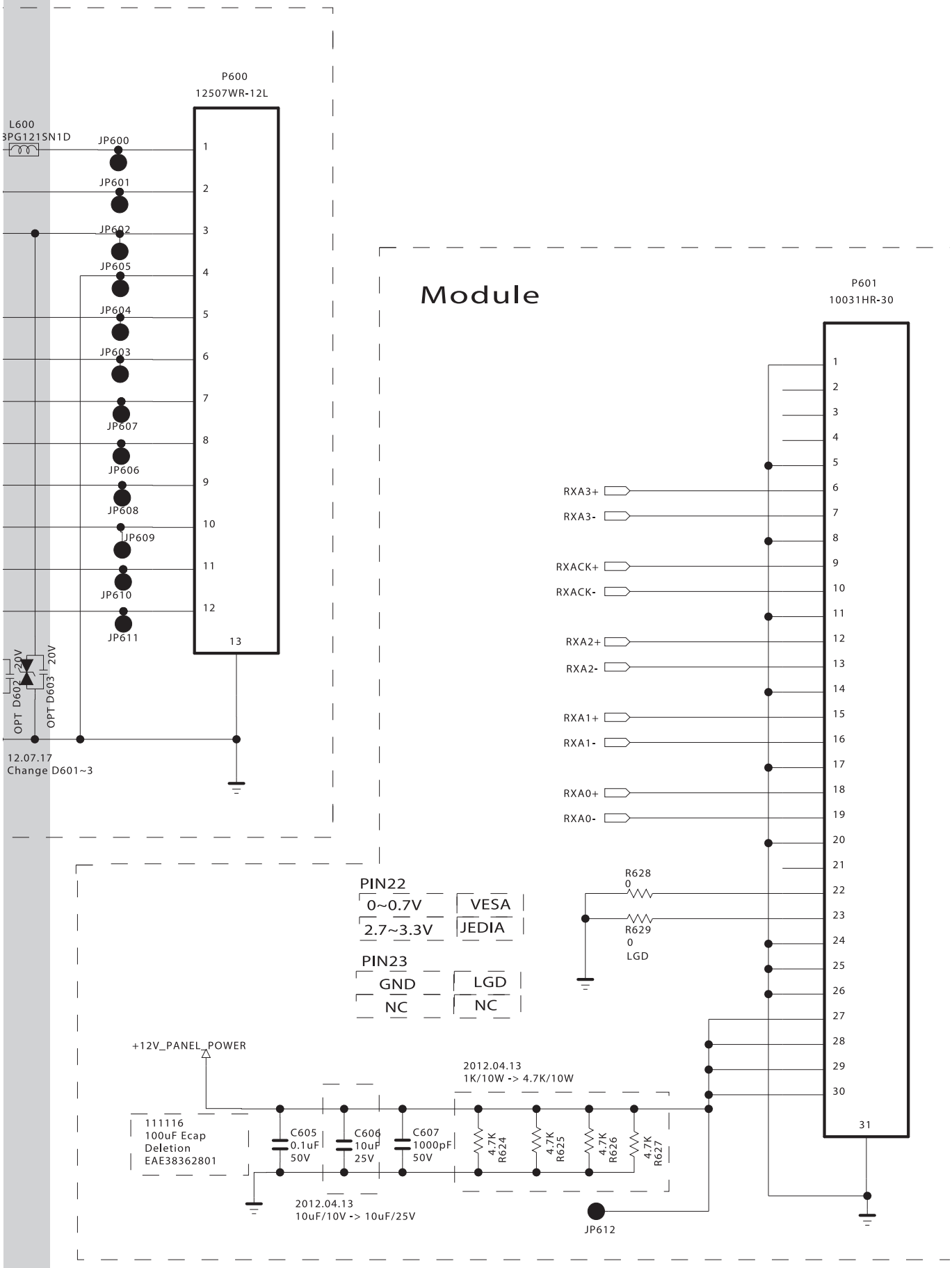


**Разъемы подключения панели управления и ЖК панели**

# AUDIO AMP

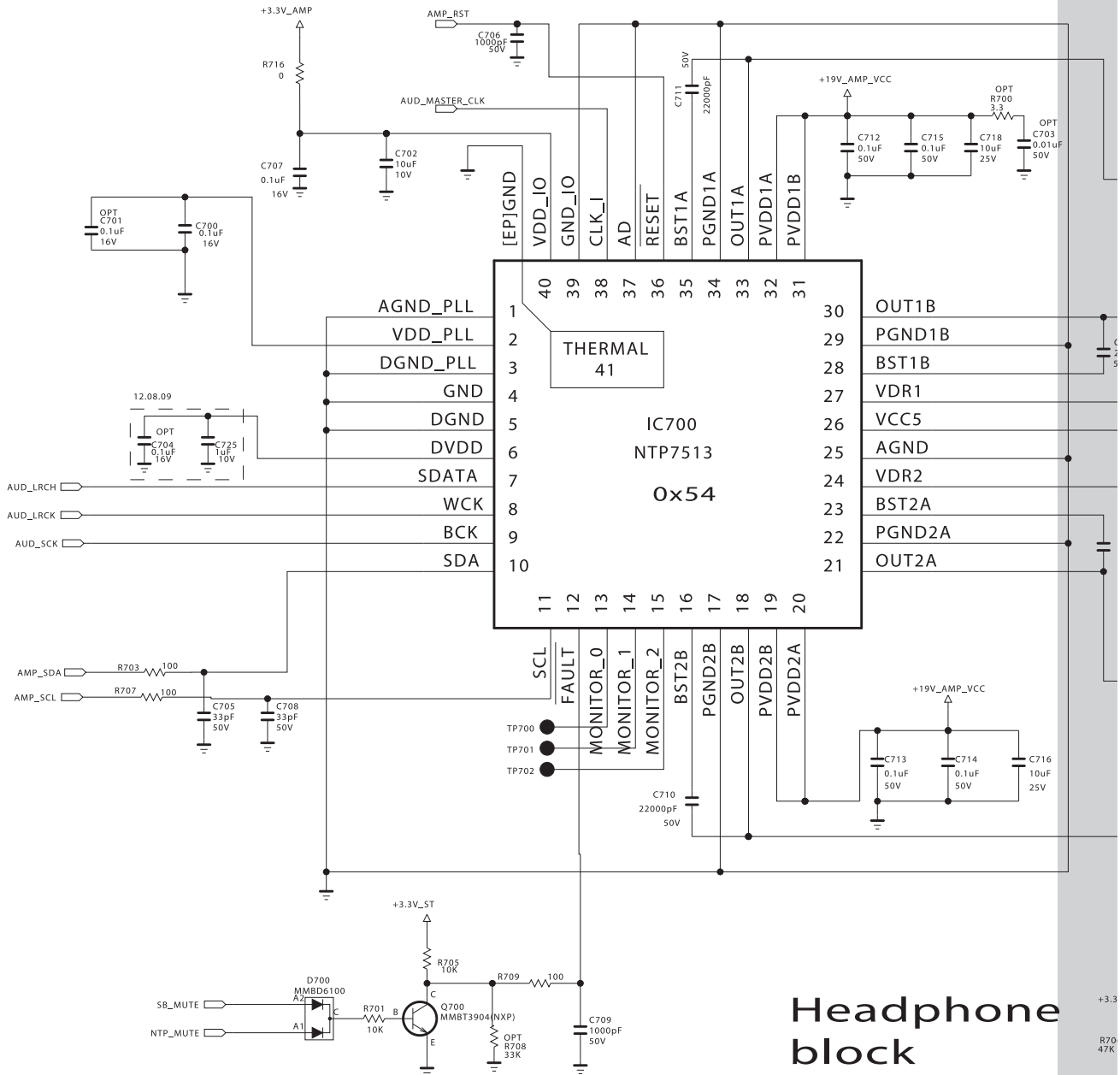


## Headphone block

## Pop-up noise killer

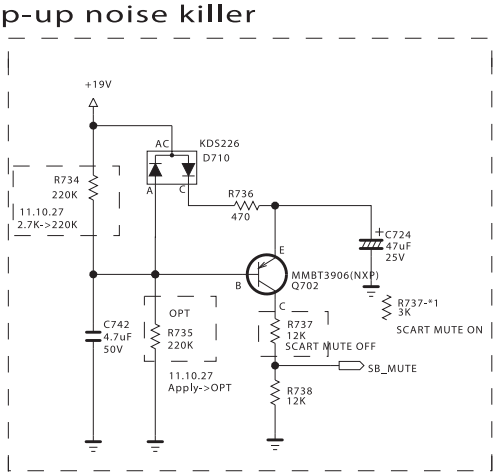


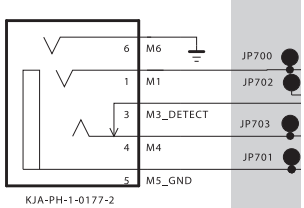

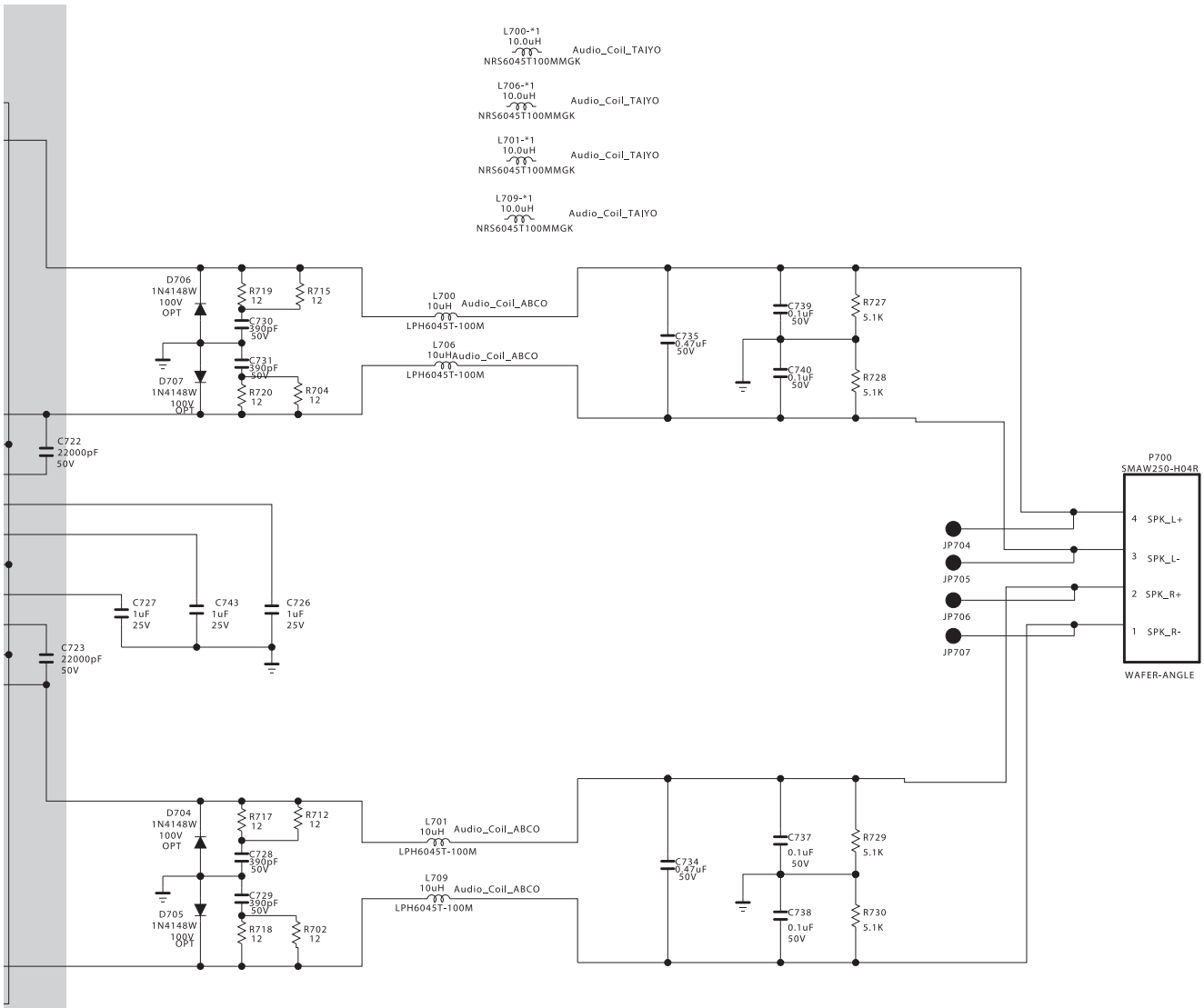


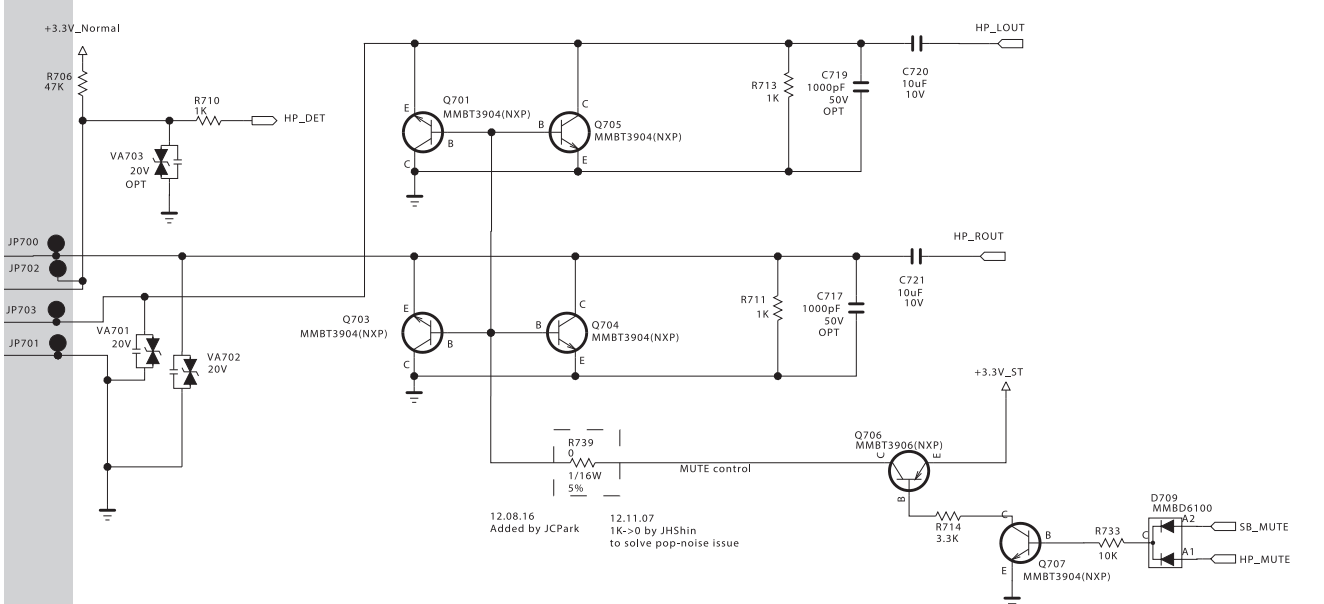


В ПАПКУ РЕМОНТНИКА

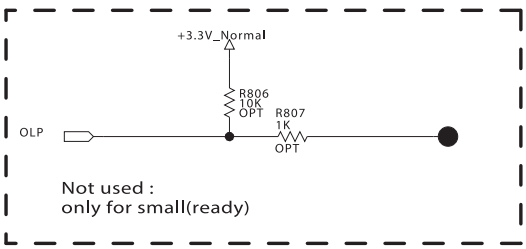
+3.3V_Normal
R806
10K
OPT
R807
1K
OPT
OLP
Not used :
only for small(ready)

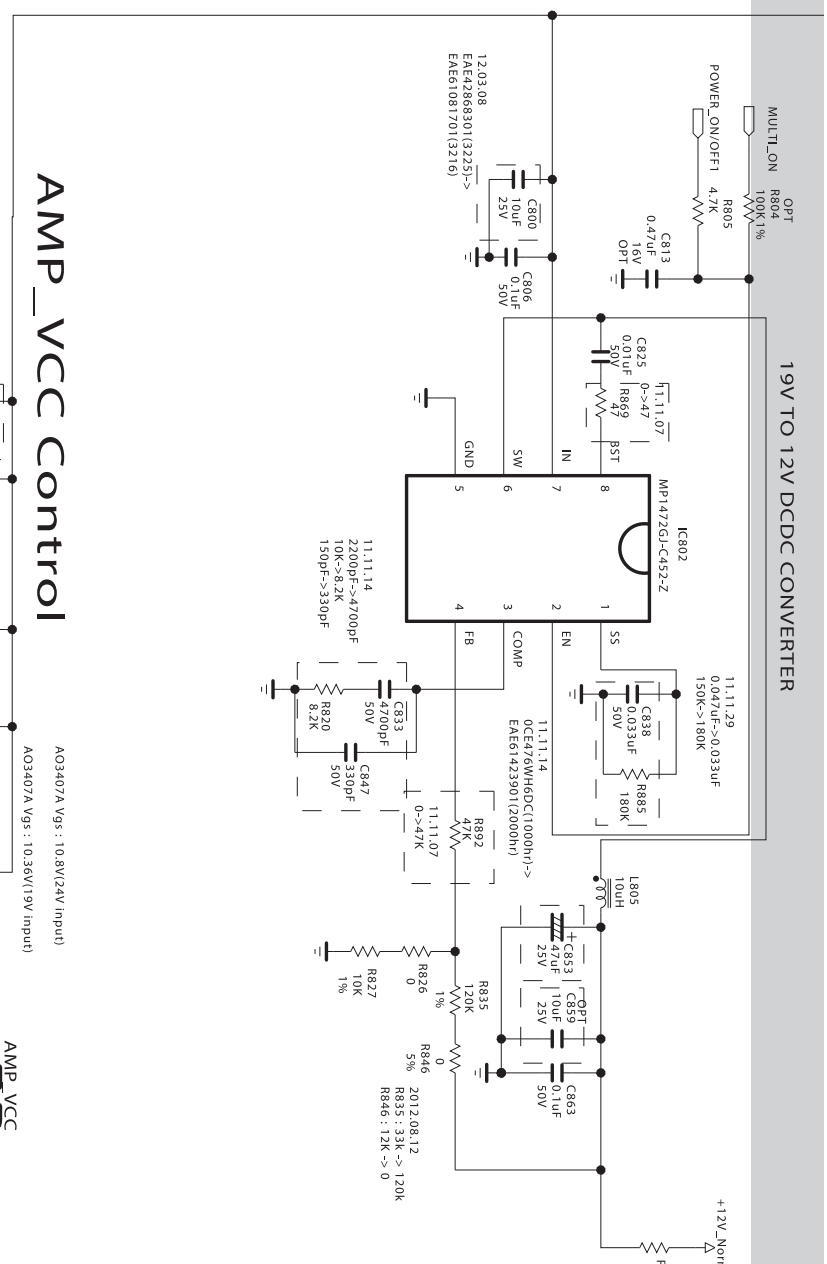
19V TO 12V DCDC CONVERTER
MULTI_ON
OPT
R804
100K 1%
R805
4.7K
POWER_ON/OFF1
C813
0.47uF
16V
OPT
C825
0.01uF
50V
11.11.07
0->47
R869
47
IC802
MP1472GJ-C452-Z
IN
BST
SW
GND
EN
SS
FB
COMP
C800
10uF
25V
C806
0.1uF
50V
12.03.08
EAE42868301(3225)->
EAE61081701(3216)
11.11.29
0.047uF->0.033uF
150K->180K
C838
0.033uF
50V
R885
180K
11.11.14
0CE476WH6DC(1000hr)->
EAE61423901(2000hr)
11.11.14
2200pF->4700pF
10K->8.2K
150pF->330pF
C833
4700pF
50V
R820
8.2K
C847
330pF
50V
11.11.07
0->47K
R892
47K
L805
10uH
C853
47uF
25V
OPT
C859
10uF
25V
C863
0.1uF
50V
R826
0
R827
10K
1%
R835
120K
1%
R846
0
5%
2012.08.12
R835 : 33k -> 120k
R846 : 12K -> 0
R863
0
+12V_Normal
AMP_VCC Control
AO3407A Vgs : 10.8V(24V input)
AO3407A Vgs : 10.36V(19V input)
MULTI_ON
R836
10K
R810
10K
Q806
MMBT3904(NXP)
B
C
E
12.03.08
EAE42868301(3225)->
EAE61081701(3216)
OPT
C801
10uF
25V
OPT
C809
0.1uF
50V
R821
12K
C839
2.2uF
50V
R880
10K
Q807
AO3407A
G
D
S
C834
0.01uF
50V
CPI2520NHL3R3ME
L807
3.3uH
2520
C860
10uF
25V
C865
0.01uF
50V
AMP_VCC
19V_AMP_VCC
R856
0
R902
0
+19V_SCART

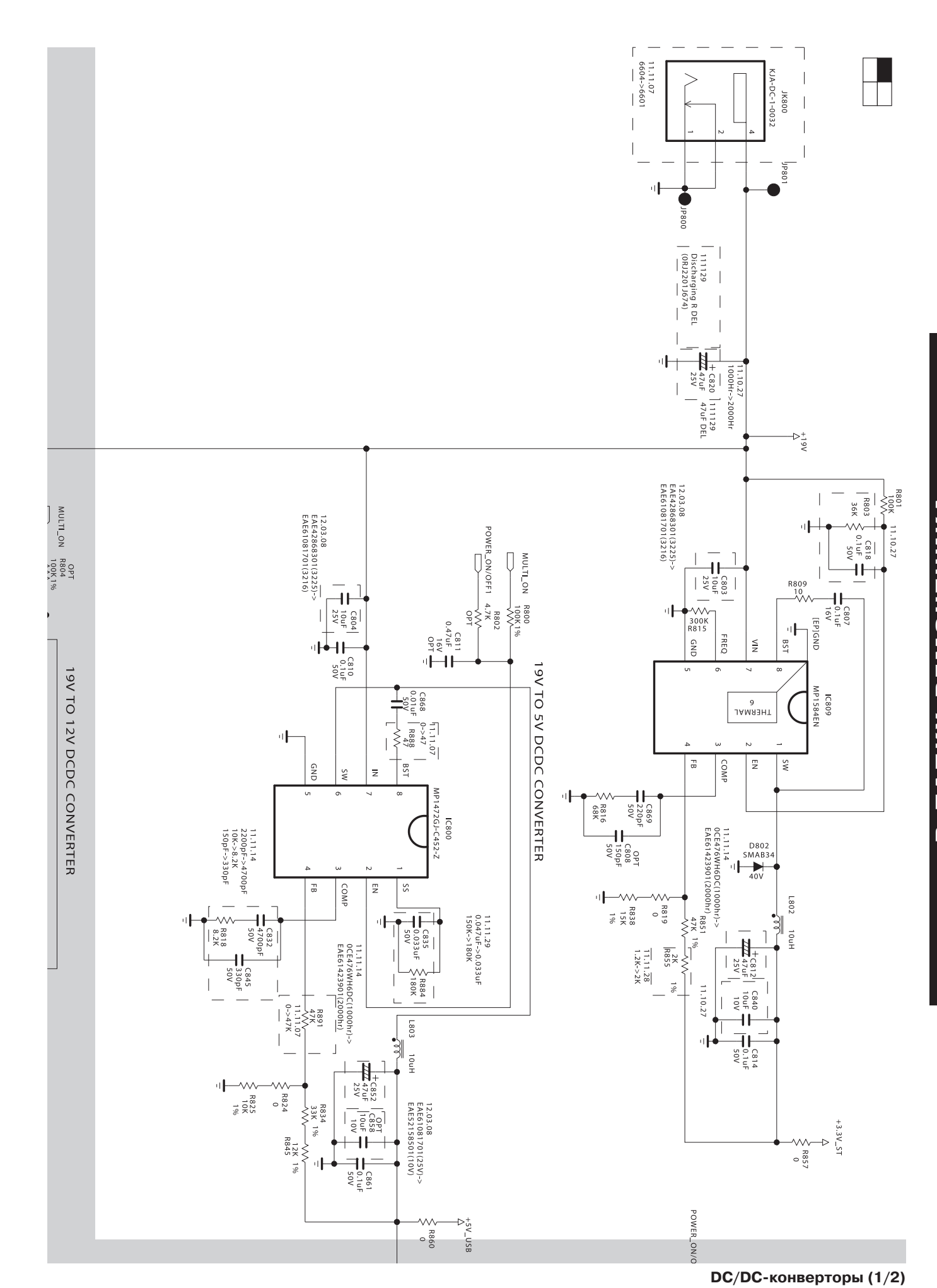
19V TO 12V DCDC CONVERTER
19V TO 5V DCDC CONVERTER
JK800
KJA-DC-1-0032
JP801
JP800
11.11.07
6604->6601
111129
Discharging R DEL
(0RJ2201J674)
C820
47uF
25V
11.10.27
1000Hr->2000Hr
111129
47uF DEL
+19V
R801
100K
11.10.27
R803
36K
C818
0.1uF
50V
R809
10
C807
0.1uF
16V
12.03.08
EAE42868301(3225)->
EAE61081701(3216)
C803
10uF
25V
300K
R815
VIN
BST
EPIGND
FREQ
GND
IC809
MP1584EN
THERMAL
6
SW
EN
COMP
FB
C869
220pF
50V
R816
68K
OPT
C808
150pF
50V
11.11.14
0CE476WH6DC(1000hr)->
EAE61423901(2000hr)
D802
SMAB34
40V
R819
0
R838
15K
1%
R851
47K 1%
R855
2K
1%
11.11.28
1.2K->2K
L802
10uH
C812
47uF
25V
C840
10uF
10V
C814
0.1uF
50V
11.10.27
R857
0
+3.3V_ST
POWER_ON/O
MULTI_ON
R800
100K 1%
R802
4.7K
OPT
POWER_ON/OFF1
C811
0.47uF
16V
OPT
C804
10uF
25V
C810
0.1uF
50V
12.03.08
EAE42868301(3225)->
EAE61081701(3216)
C868
0.01uF
50V
R888
47
11.11.07
0->47
BST
IN
IC800
MP1472GJ-C4522-Z
GND
SW
SS
EN
COMP
FB
11.11.29
0.047uF->0.033uF
150K->180K
C835
0.033uF
50V
R884
180K
11.11.14
0CE476WH6DC(1000hr)->
EAE61423901(2000hr)
R891
47K
11.11.07
0->47K
C832
4700pF
50V
R818
8.2K
C845
330pF
50V
11.11.14
2200pF->4700pF
10K->8.2K
150pF->330pF
R824
0
R825
10K
1%
R834
33K 1%
R845
12K 1%
L803
10uH
C852
47uF
25V
OPT
C858
10uF
10V
C861
0.1uF
50V
12.03.08
EAE61081701(25V)->
EAE52158501(10V)
R860
0
+5V_USB
OPT
R804
100K 1%
MULTI_ON

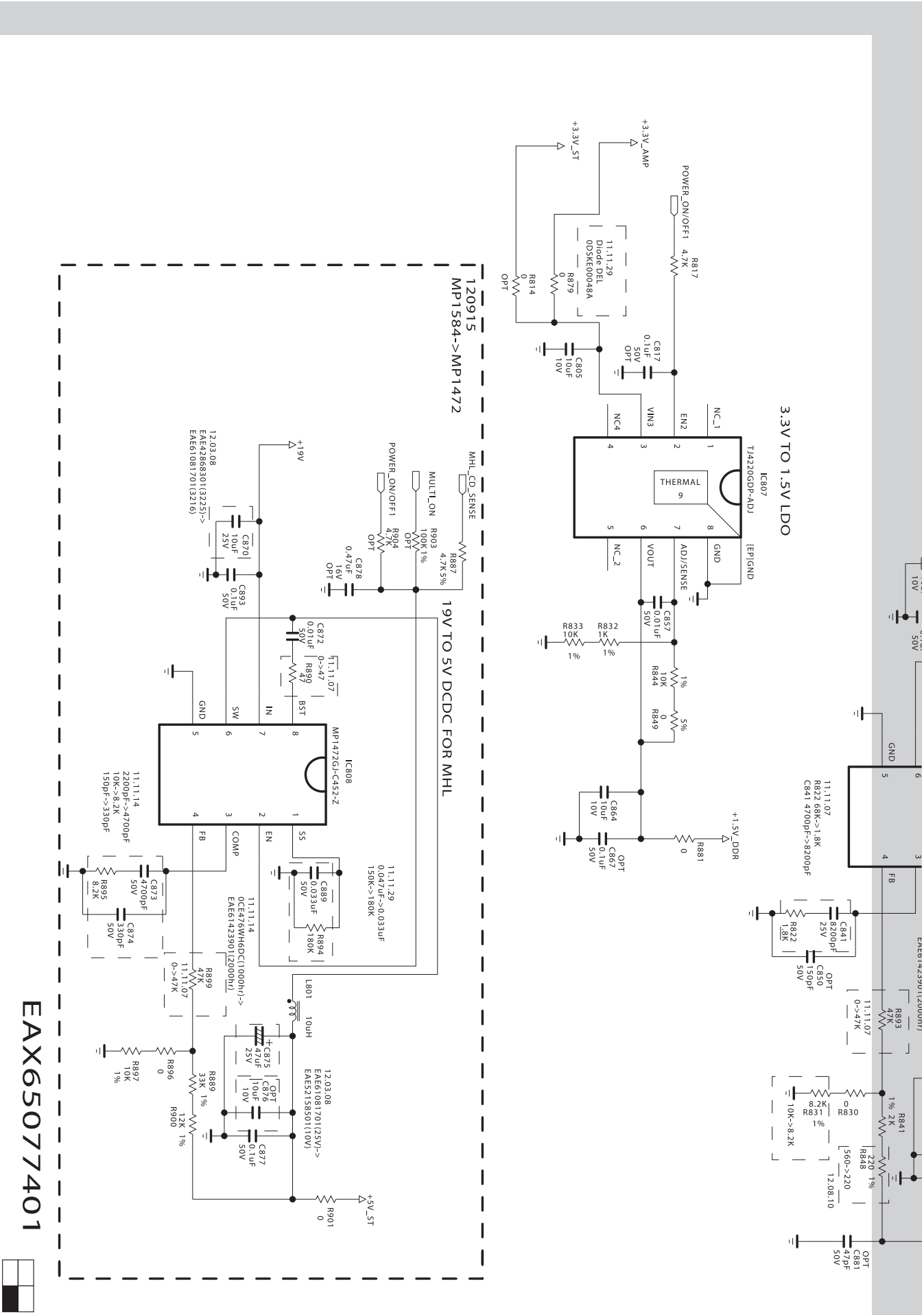
3.3V TO 1.5V LDO
IC807
TJ4220GDP-ADJ
THERMAL
9
NC_1
EN2
VIN3
NC4
GND
ADJ/SENSE
VOUT
NC_2
[EP]GND
POWER_ON/OFF1
R817
4.7K
+3.3V_AMP
+3.3V_ST
11.11.29
Diode DEL
0DSKE00048A
R879
R814
OPT
C817
0.1uF
50V
OPT
C805
10uF
10V
C857
0.01uF
50V
R833
10K
1%
R832
1K
1%
R844
10K
R849
0
C864
10uF
10V
C867
0.1uF
50V
OPT
R881
0
+1.5V_DDR
11.11.07
R822 68K->1.8K
C841 4700pF->8200pF
C841
8200pF
25V
R822
1.8K
C850
150pF
50V
OPT
R893
47K
11.11.07
0->47K
R841
2K
1%
R848
220
1%
560->220
12.08.10
R830
0
R831
8.2K
1%
10K->8.2K
C881
47pF
50V
OPT
120915
MP1584->MP1472
19V TO 5V DCDC FOR MHL
MHL_CD_SENSE
R887
4.7K 5%
MULTI_ON
R903
100K 1%
OPT
POWER_ON/OFF1
R904
4.7K
OPT
C878
0.47uF
16V
OPT
+19V
12.03.08
EAE42868301(3225)->
EAE61081701(3216)
C870
10uF
25V
C893
0.1uF
50V
C872
0.01uF
50V
R890
47
11.11.07
0->47
IC808
MP1472GJ-C452-Z
IN
BST
SW
GND
EN
SS
COMP
FB
11.11.14
2200pF->4700pF
10K->8.2K
150pF->330pF
C873
4700pF
50V
R895
8.2K
C874
330pF
50V
C889
0.033uF
50V
R894
180K
11.11.29
0.047uF->0.033uF
150K->180K
11.11.14
0CE476WH6DC(1000hr)->
EAE61423901(2000hr)
R899
47K
11.11.07
0->47K
L801
10uH
C875
47uF
25V
OPT
C876
10uF
10V
C877
0.1uF
50V
12.03.08
EAE61081701(25V)->
EAE52158501(10V)
R896
0
R897
10K
1%
R889
33K 1%
R900
12K 1%
R901
0
+5V_ST
EAX65077401

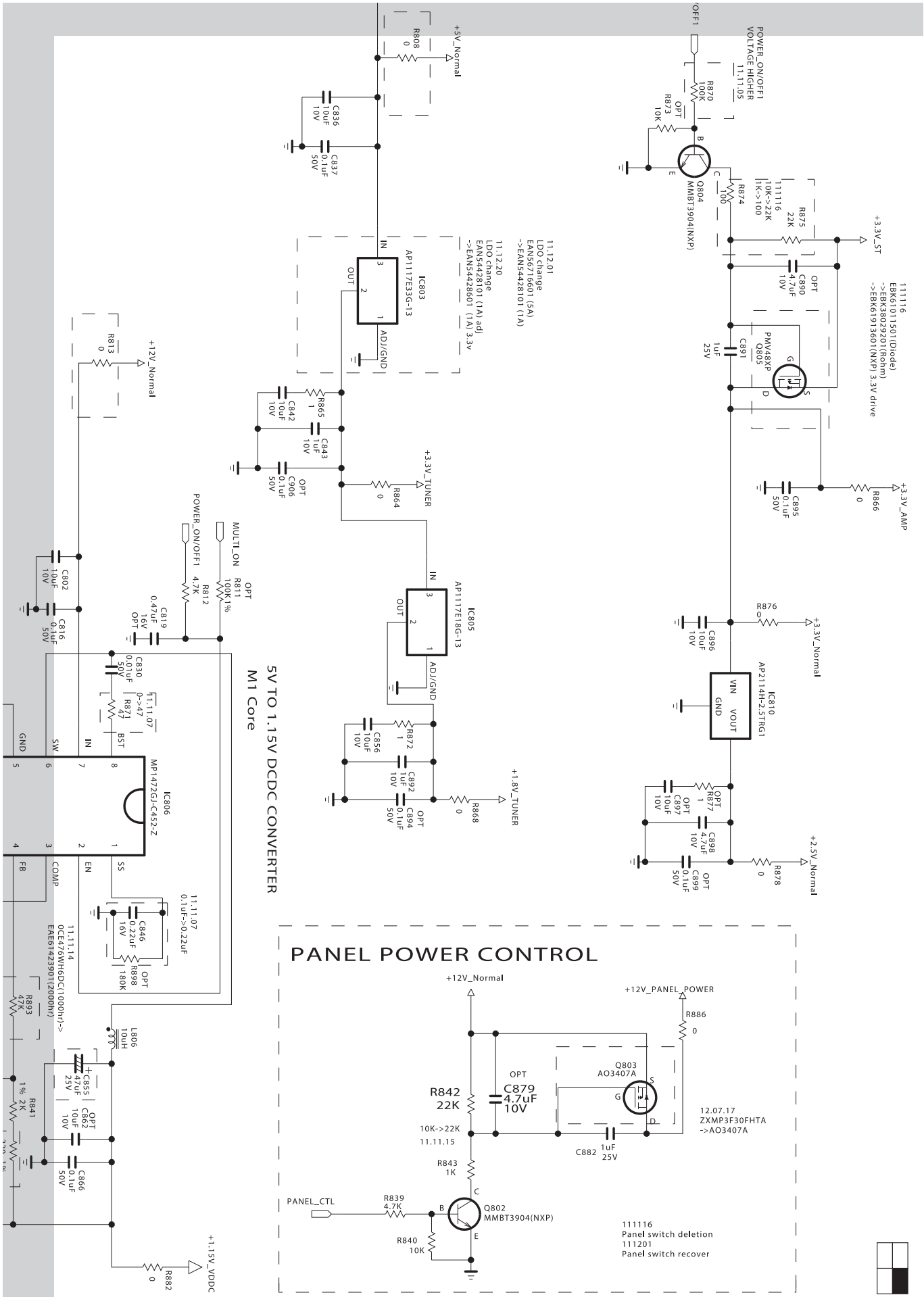


**DC/DC-конверторы (2/2)**

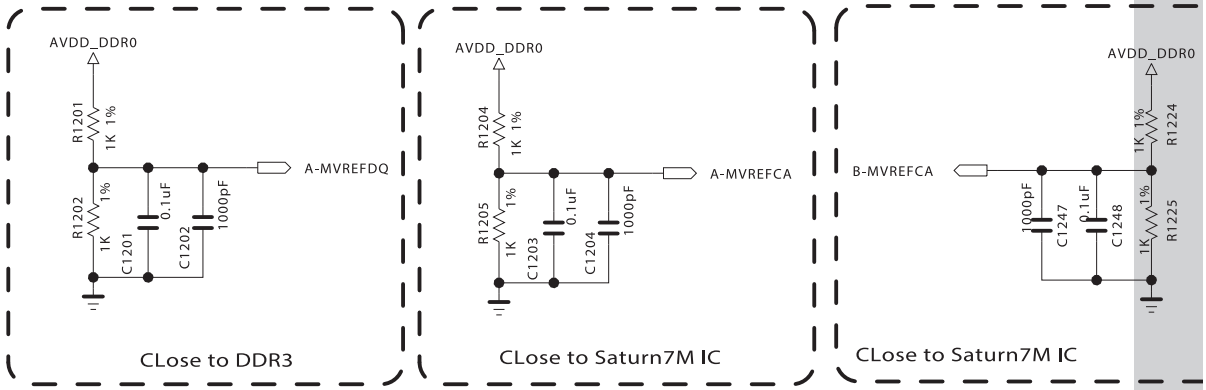
AVDD_DDR0
R1201
1K 1%
R1202
1K 1%
C1201
0.1uF
C1202
1000pF
A-MVREFDQ
CLose to DDR3
AVDD_DDR0
R1204
1K 1%
R1205
1K 1%
C1203
0.1uF
C1204
1000pF
A-MVREFCA
CLose to Saturn7M IC
AVDD_DDR0
B-MVREFCA
1000pF
C1247
0.1uF
C1248
1K 1%
R1225
1K 1%
R1224
CLose to Saturn7M IC

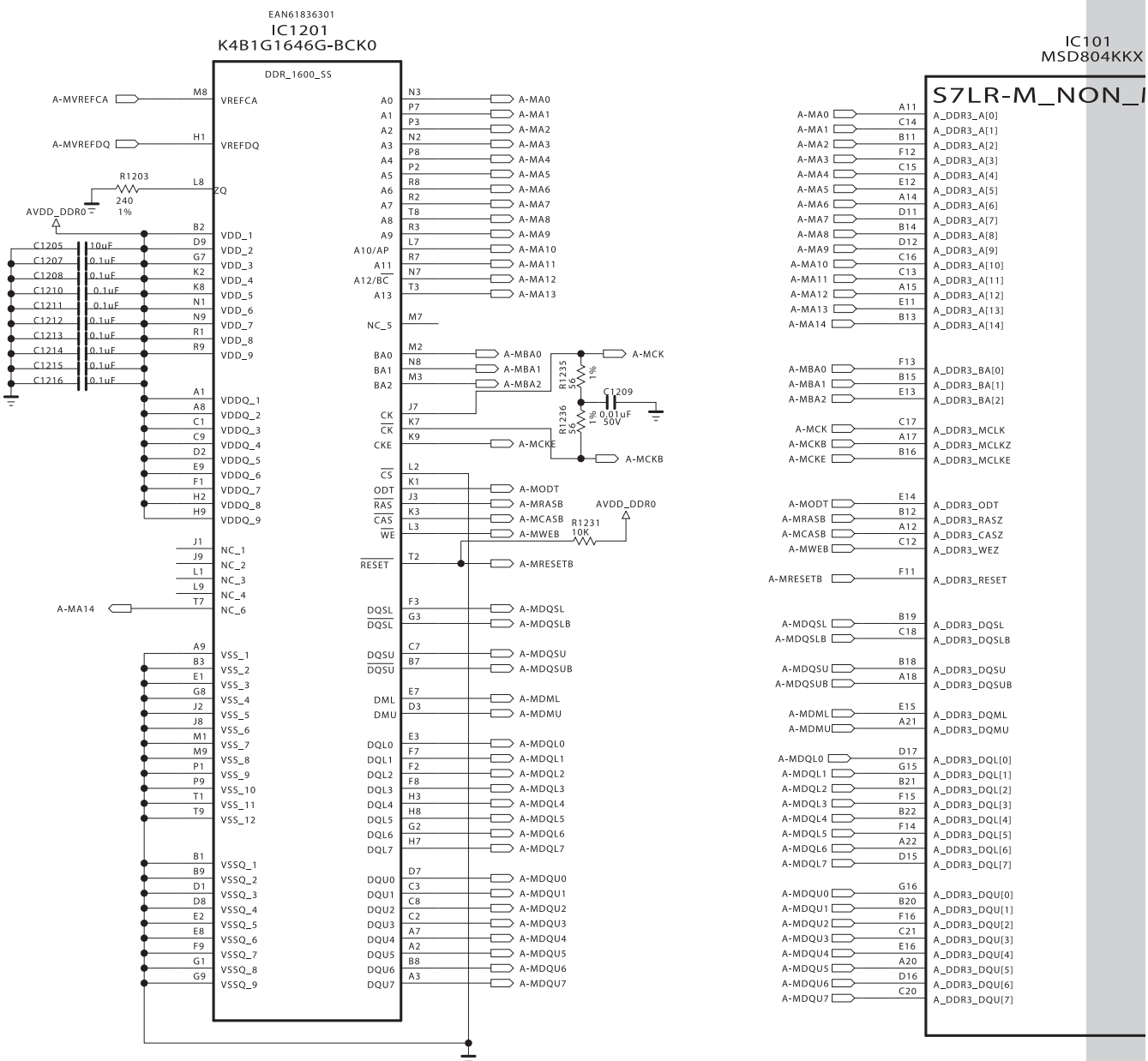
EAN61836301
IC1201
K4B1G1646G-BCK0
DDR_1600_SS
A-MVREFCA
A-MVREFDQ
R1203
240
1%
AVDD_DDR0
C1205 10uF
C1207 0.1uF
C1208 0.1uF
C1210 0.1uF
C1211 0.1uF
C1212 0.1uF
C1213 0.1uF
C1214 0.1uF
C1215 0.1uF
C1216 0.1uF
A-MA14
VREFCA
VREFDQ
ZQ
VDD_1
VDD_2
VDD_3
VDD_4
VDD_5
VDD_6
VDD_7
VDD_8
VDD_9
VDDQ_1
VDDQ_2
VDDQ_3
VDDQ_4
VDDQ_5
VDDQ_6
VDDQ_7
VDDQ_8
VDDQ_9
NC_1
NC_2
NC_3
NC_4
NC_6
VSS_1
VSS_2
VSS_3
VSS_4
VSS_5
VSS_6
VSS_7
VSS_8
VSS_9
VSS_10
VSS_11
VSS_12
VSSQ_1
VSSQ_2
VSSQ_3
VSSQ_4
VSSQ_5
VSSQ_6
VSSQ_7
VSSQ_8
VSSQ_9
A0
A1
A2
A3
A4
A5
A6
A7
A8
A9
A10/AP
A11
A12/BC
A13
NC_5
BA0
BA1
BA2
CK
CK
CKE
CS
ODT
RAS
CAS
WE
RESET
DQSL
DQSL
DQSU
DQSU
DML
DMU
DQL0
DQL1
DQL2
DQL3
DQL4
DQL5
DQL6
DQL7
DQU0
DQU1
DQU2
DQU3
DQU4
DQU5
DQU6
DQU7
A-MA0
A-MA1
A-MA2
A-MA3
A-MA4
A-MA5
A-MA6
A-MA7
A-MA8
A-MA9
A-MA10
A-MA11
A-MA12
A-MA13
A-MBA0
A-MBA1
A-MBA2
A-MCK
R1235 56 1%
C1209 0.01uF 50V
R1236 56 1%
A-MCKE
A-MCKB
A-MODT
A-MRASB
A-MCASB
A-MWEB
AVDD_DDR0
R1231 10K
A-MRESETB
A-MDQSL
A-MDQSLB
A-MDQSU
A-MDQSUB
A-MDML
A-MDMU
A-MDQL0
A-MDQL1
A-MDQL2
A-MDQL3
A-MDQL4
A-MDQL5
A-MDQL6
A-MDQL7
A-MDQU0
A-MDQU1
A-MDQU2
A-MDQU3
A-MDQU4
A-MDQU5
A-MDQU6
A-MDQU7
IC101
MSD804KKX
S7LR-M_NON_
A_DDR3_A[0]
A_DDR3_A[1]
A_DDR3_A[2]
A_DDR3_A[3]
A_DDR3_A[4]
A_DDR3_A[5]
A_DDR3_A[6]
A_DDR3_A[7]
A_DDR3_A[8]
A_DDR3_A[9]
A_DDR3_A[10]
A_DDR3_A[11]
A_DDR3_A[12]
A_DDR3_A[13]
A_DDR3_A[14]
A_DDR3_BA[0]
A_DDR3_BA[1]
A_DDR3_BA[2]
A_DDR3_MCLK
A_DDR3_MCLKZ
A_DDR3_MCLKE
A_DDR3_ODT
A_DDR3_RASZ
A_DDR3_CASZ
A_DDR3_WEZ
A_DDR3_RESET
A_DDR3_DQSL
A_DDR3_DQSLB
A_DDR3_DQSU
A_DDR3_DQSUB
A_DDR3_DQML
A_DDR3_DQMU
A_DDR3_DQL[0]
A_DDR3_DQL[1]
A_DDR3_DQL[2]
A_DDR3_DQL[3]
A_DDR3_DQL[4]
A_DDR3_DQL[5]
A_DDR3_DQL[6]
A_DDR3_DQL[7]
A_DDR3_DQU[0]
A_DDR3_DQU[1]
A_DDR3_DQU[2]
A_DDR3_DQU[3]
A_DDR3_DQU[4]
A_DDR3_DQU[5]
A_DDR3_DQU[6]
A_DDR3_DQU[7]

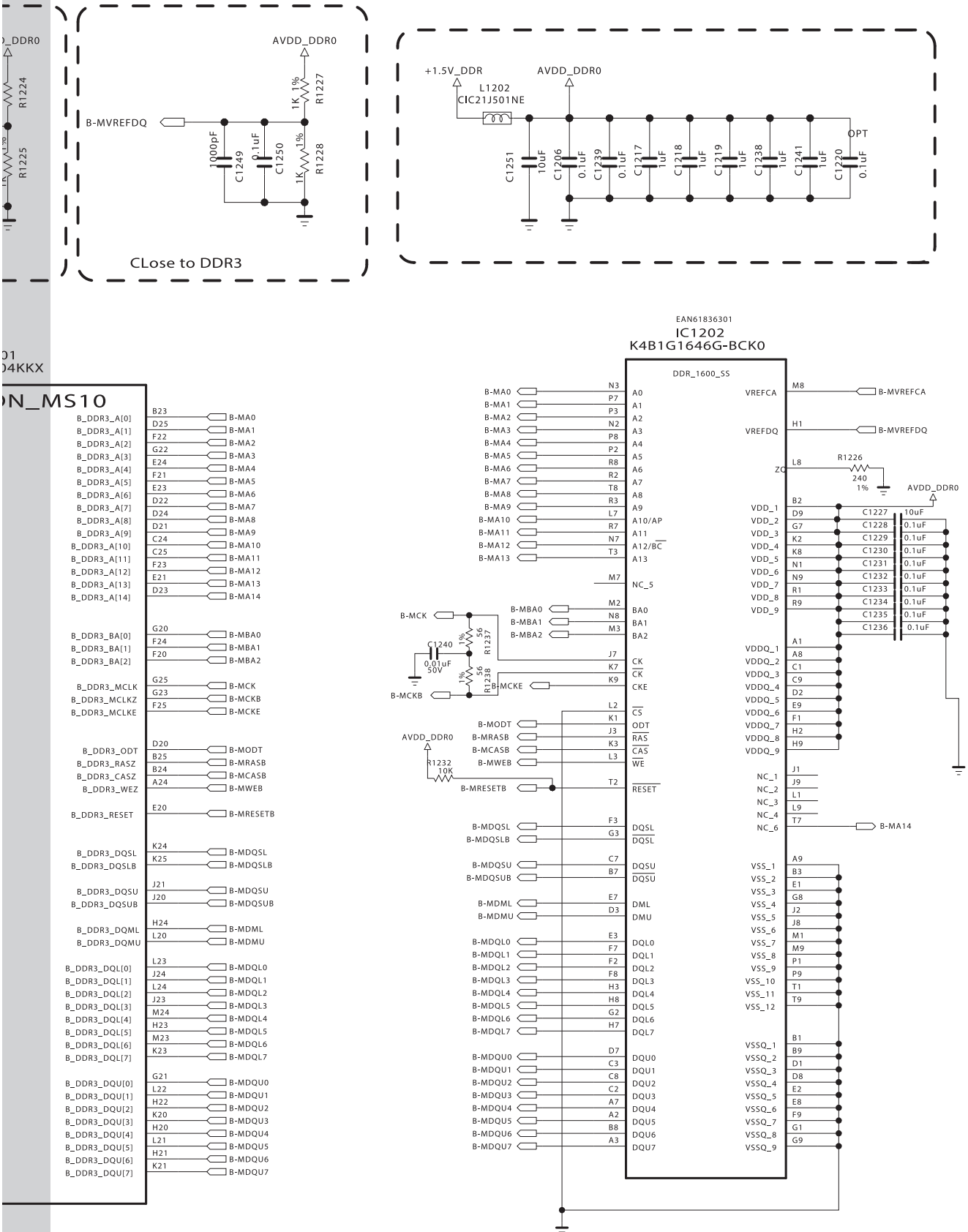


В ПАПКУ РЕМОНТНИКА

**Главный процессор и DDR-память**

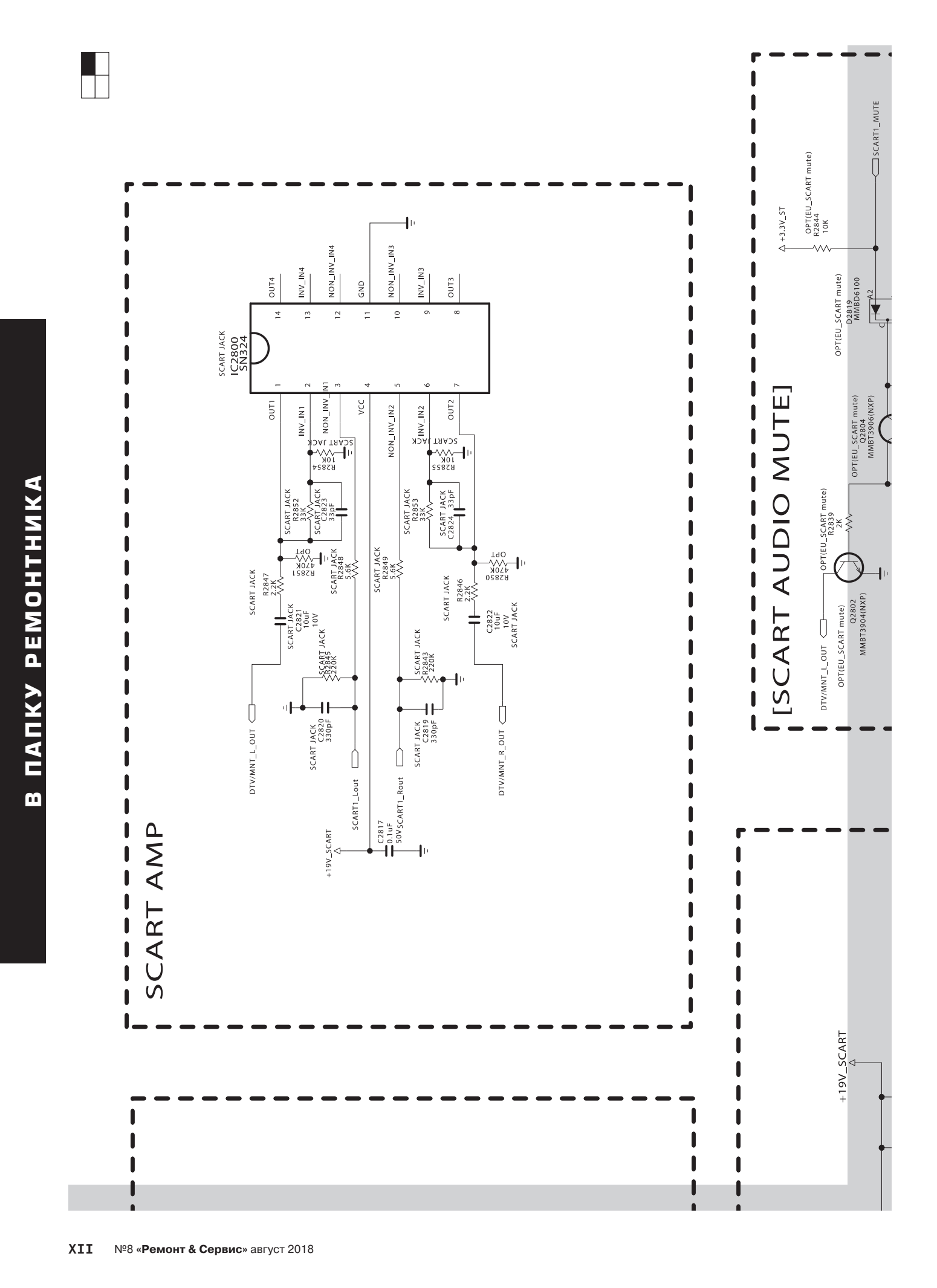
SCART AMP
SCART JACK
IC2800
SN324
OUT1
INV_IN1
NON_INV_IN1
VCC
NON_INV_IN2
INV_IN2
OUT2
OUT4
INV_IN4
NON_INV_IN4
GND
NON_INV_IN3
INV_IN3
OUT3
R2854
10K
R2855
10K
R2852
33K
C2823
330pF
R2853
33K
C2824
33pF
R2851
470K
OPT
R2850
470K
R2847
2.2K
C2821
10uF
10V
R2848
5.6K
R2849
5.6K
R2846
2.2K
C2822
10uF
10V
R2845
220K
R2843
220K
C2820
330pF
C2819
330pF
DTV/MNT_L_OUT
DTV/MNT_R_OUT
SCART1_Lout
SCART1_Rout
+19V_SCART
C2817
0.1uF
50V
[SCART AUDIO MUTE]
+3.3V_ST
OPT(EU_SCART mute)
R2844
10K
SCART1_MUTE
D2819
MMBD6100
Q2804
MMBT3906(NXP)
R2839
2K
Q2802
MMBT3904(NXP)
DTV/MNT_L_OUT
+19V_SCART

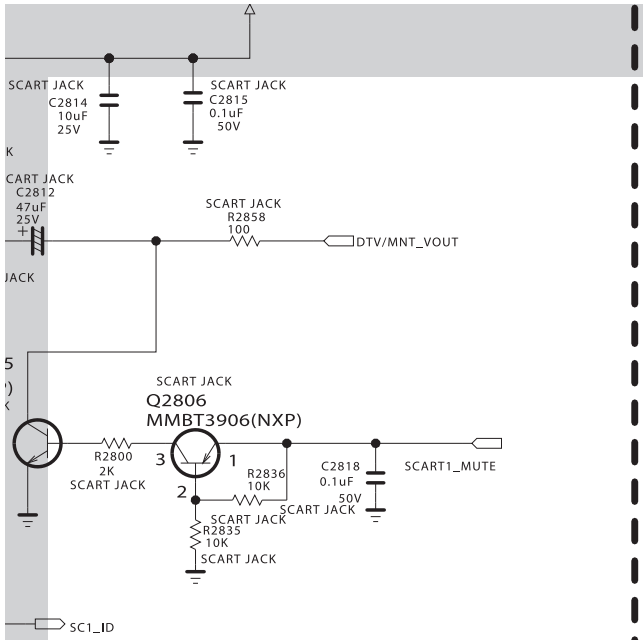


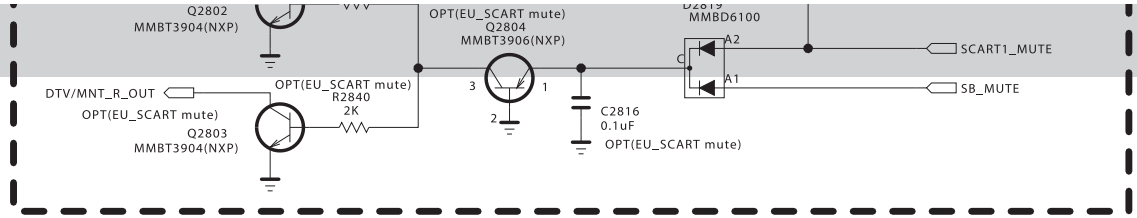


## Интерфейсы SCART, COMP, CVBS (1/2)

# SCART / COMPONENT&CVBS

## COMPONENT&CVBS

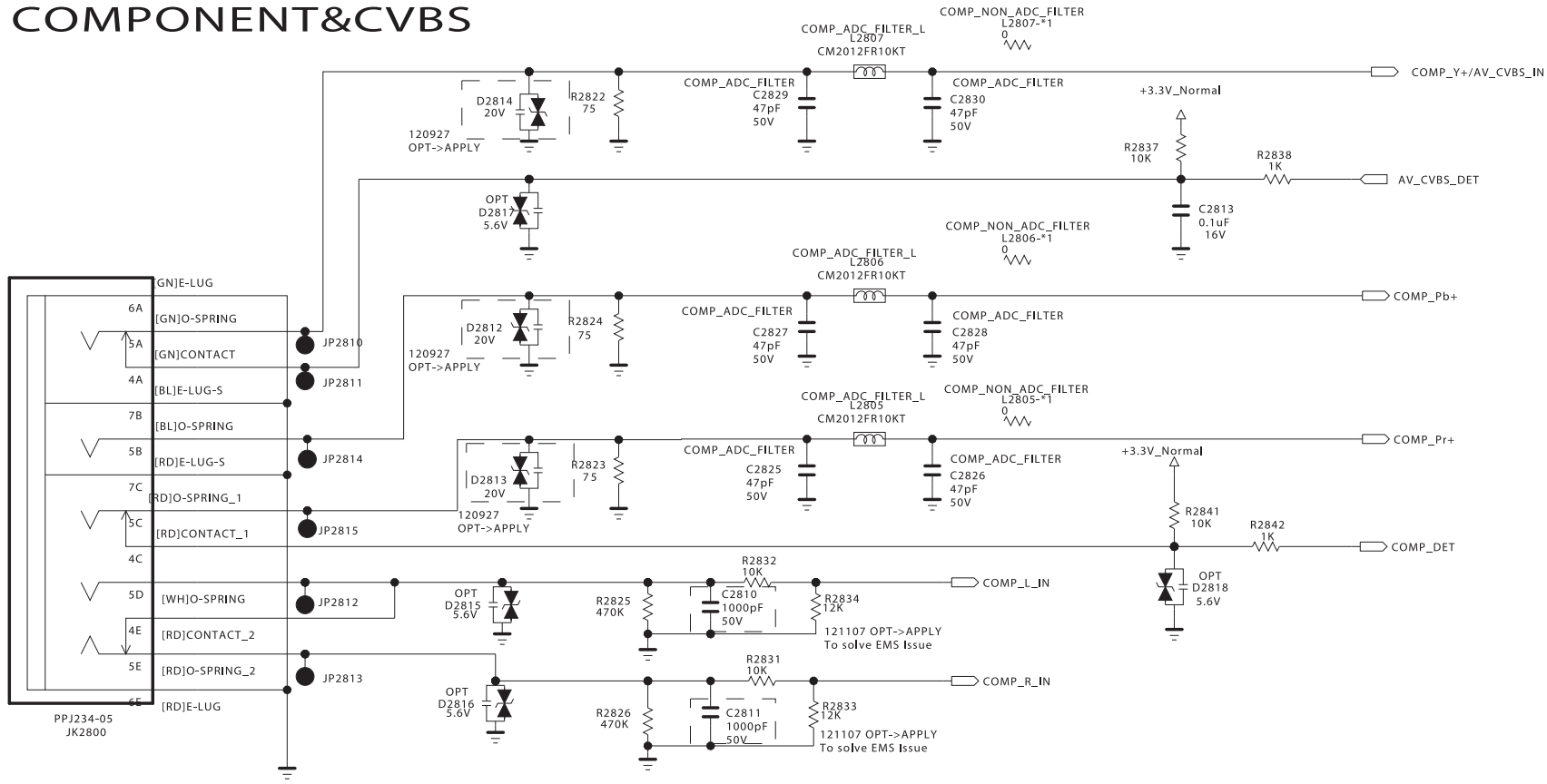


## FULL SCART

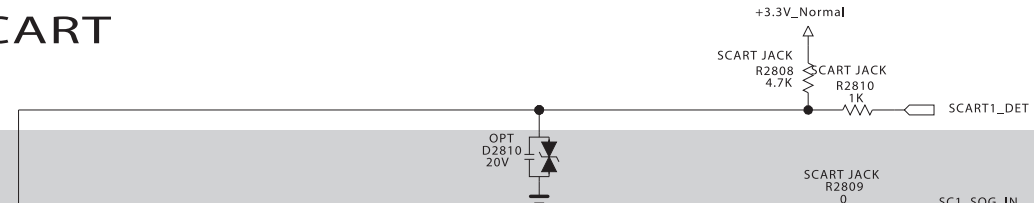

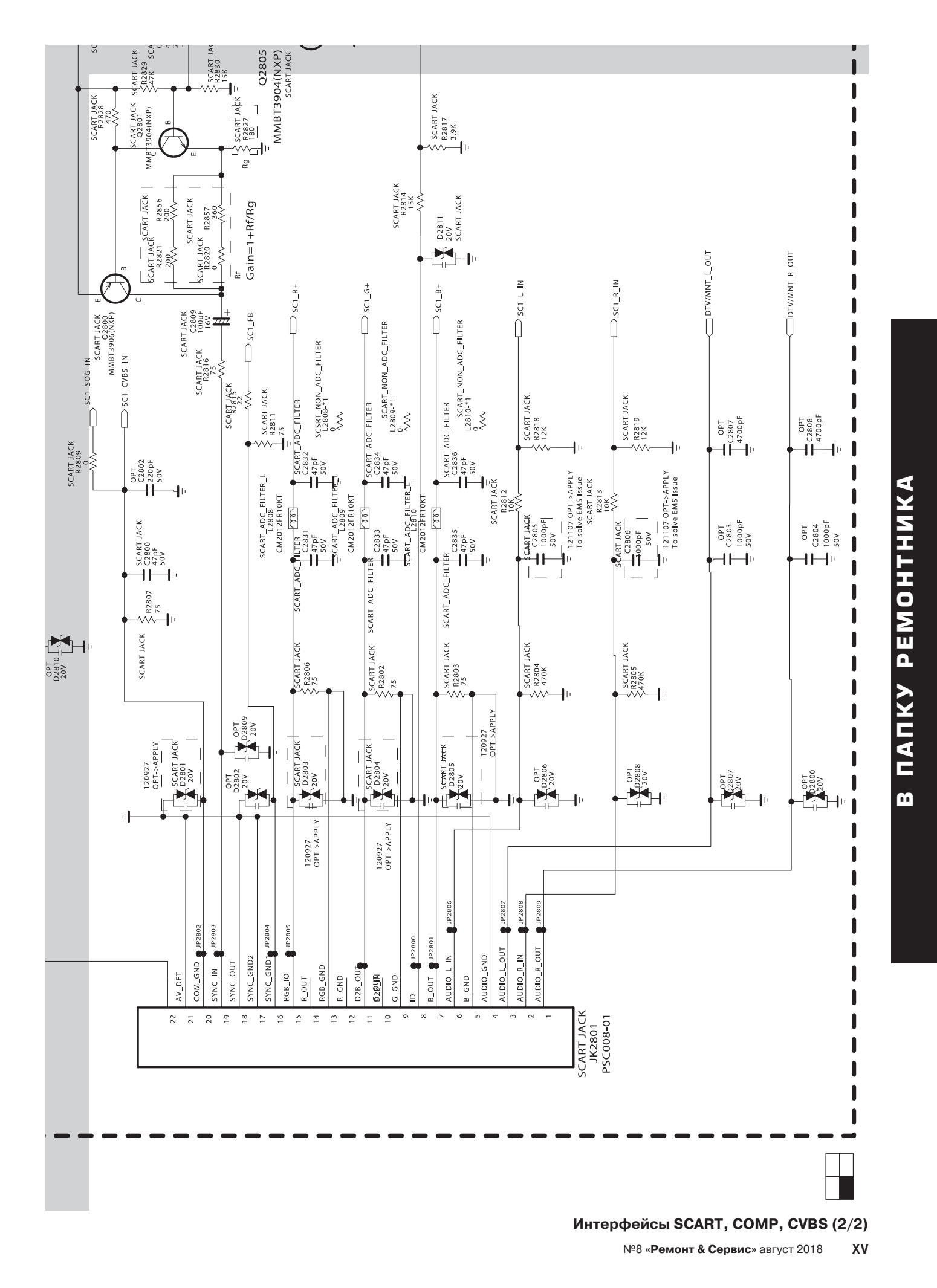


**Интерфейсы SCART, COMP, CVBS (2/2)**

# LED DRIVER

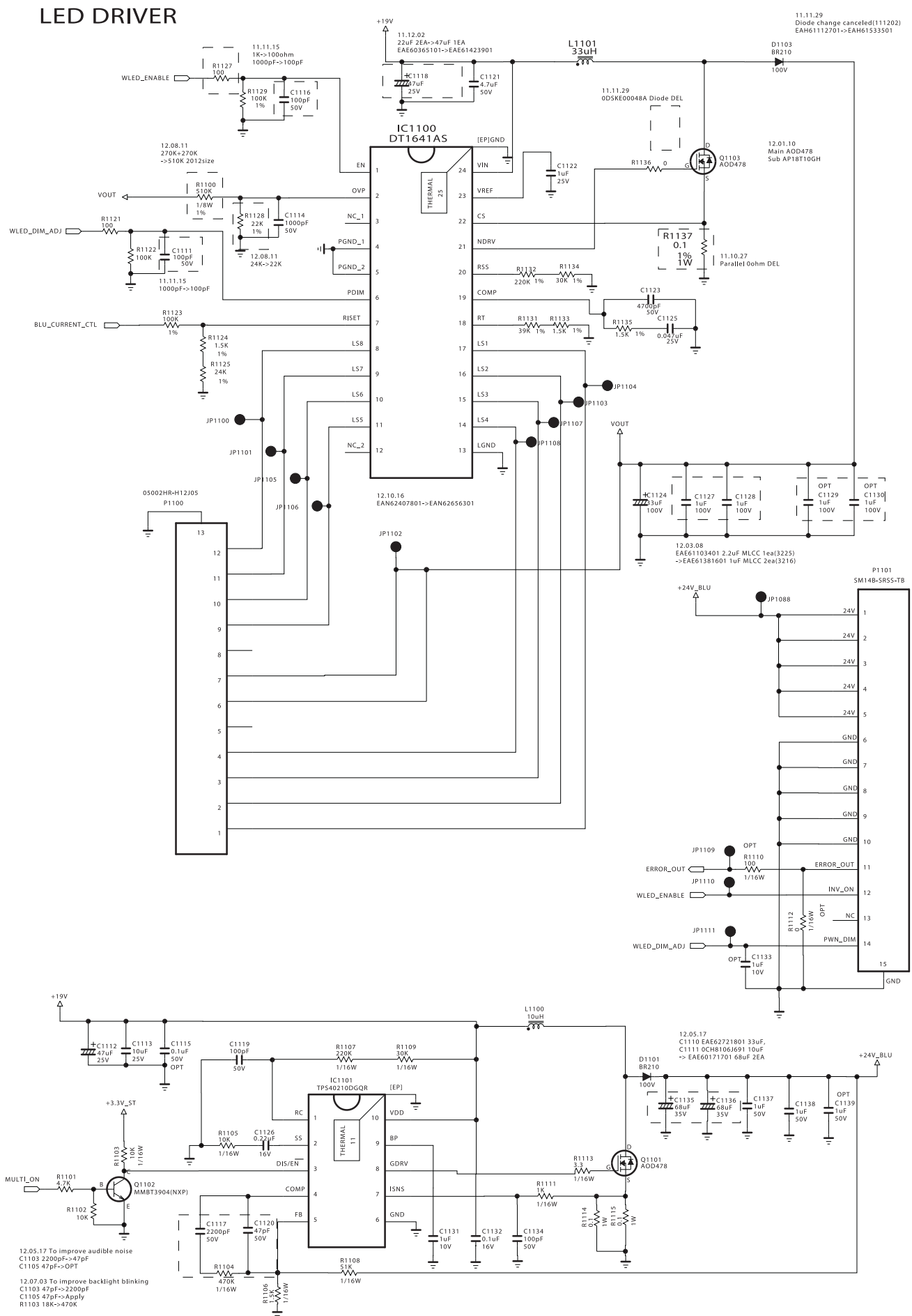


**LED-драйвер задней подсветки ЖК панели**