Internal Use Only

North/Latin America	http://aic.lgservice.com
Europe/Africa	http://eic.lgservice.com
Asia/Oceania	http://biz.lgservice.com

LED TV
SERVICE MANUAL

CHASSIS : LD53H / LD53J

MODEL : 55UF85** 55UF85**-Z*

CAUTION
BEFORE SERVICING THE CHASSIS,
READ THE SAFETY PRECAUTIONS IN THIS MANUAL.

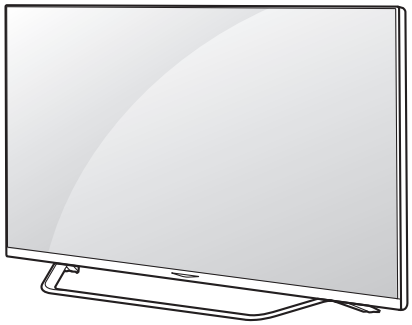

P/NO : MFL68762604 (1502-REV00)

Printed in Korea

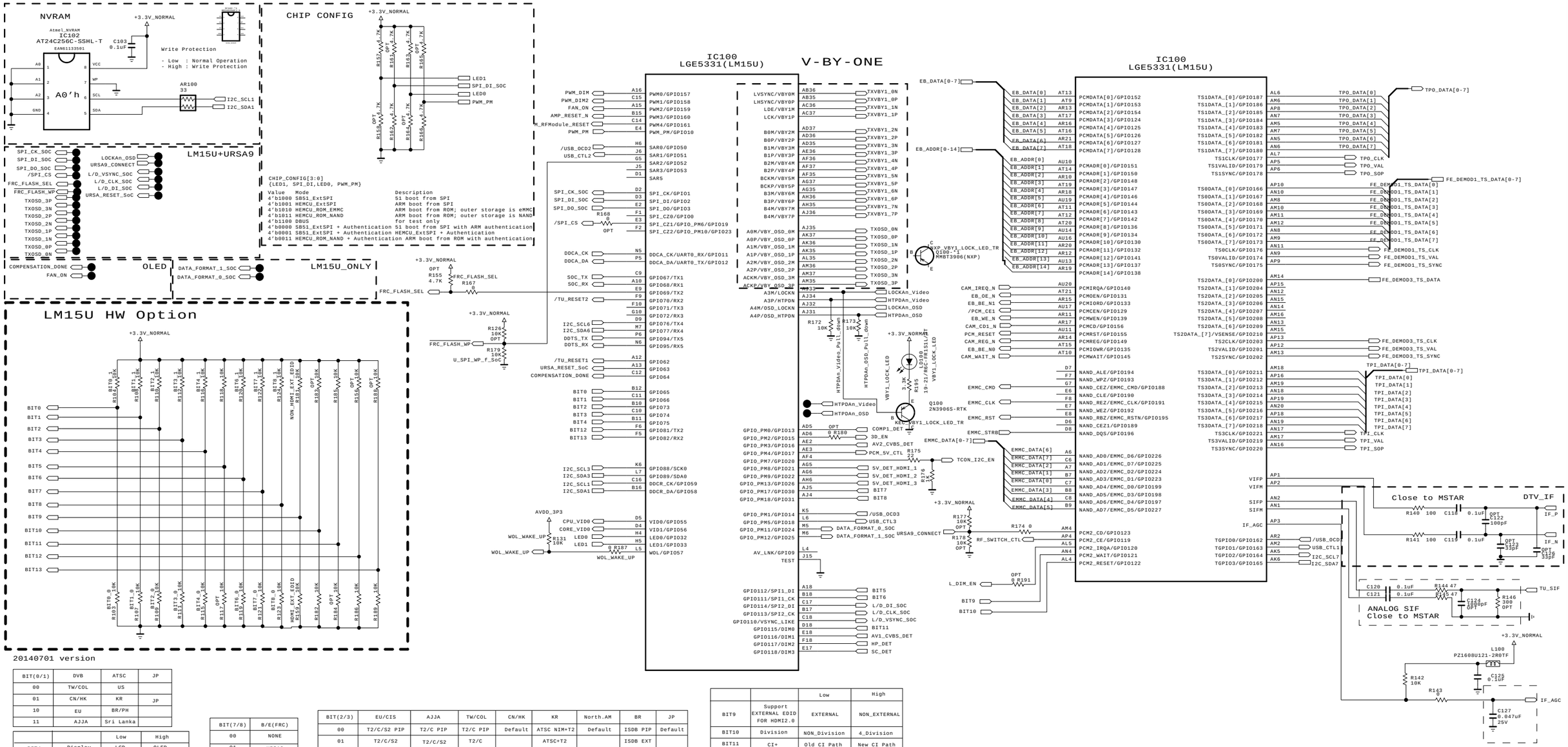

20140701 version

BIT(0/1)	DVB	ATSC	JP
00	TW/COL	US	
01	CN/HK	KR	JP
10	EU	BR/PH	
11	AJJA	Sri Lanka	

		Low	High
BIT4	Display	LCD	OLED
BIT5	Resolution	FHD	UHD
BIT6	Model	LM15U only	LM15U+URSA

BIT(7/8)	B/E(FRC)
00	NONE
01	URSA9
10	URSA11-P
11	URSA11

BIT(2/3)	EU/CIS	AJJA	TW/COL	CN/HK	KR	North.AM	BR	JP
00	T2/C/S2 PIP	T2/C PIP	T2/C PIP	Default	ATSC NIM+T2	Default	ISDB PIP	Default
01	T2/C/S2	T2/C/S2	T2/C		ATSC+T2		ISDB EXT	
10	T/C	T	T/C		ATSC		ISDB INT	
11		T2			ATSC PIP			

		Low	High
BIT9	Support EXTERNAL EDID FOR HDMI2.0	EXTERNAL	NON_EXTERNAL
BIT10	Division	NON_Division	4_Division
BIT11	CI+	Old CI Path	New CI Path
BIT12	VID	VID Enable	VID Disable
BIT13	Reserved		

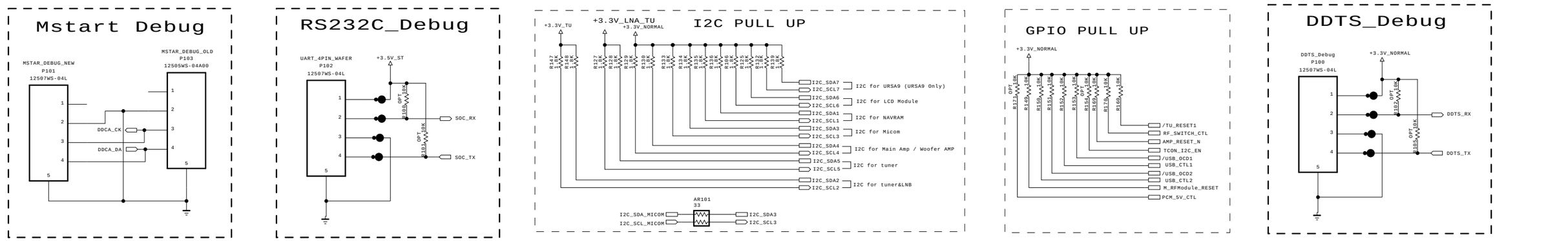

THE ⚠ SYMBOL MARK OF THIS SCHEMETIC DIAGRAM INCORPORATES SPECIAL FEATURES IMPORTANT FOR PROTECTION FROM X-RADIATION. FIRE AND ELECTRICAL SHOCK HAZARDS, WHEN SERVICING IF IS ESSENTIAL THAT ONLY MANUFACTURES SPECIFIED PARTS BE USED FOR THE CRITICAL COMPONENTS IN THE ⚠ SYMBOL MARK OF THE SCHEMETIC.

SECRET
LGElectronics

LG ELECTRONICS

MODEL	LM15U	DATE	2014-12-17
BLOCK	MAIN1_SYSTEM	SHEET	1

Copyright © 2015 LG Electronics. Inc. All rights reserved.
Only for training and service purposes

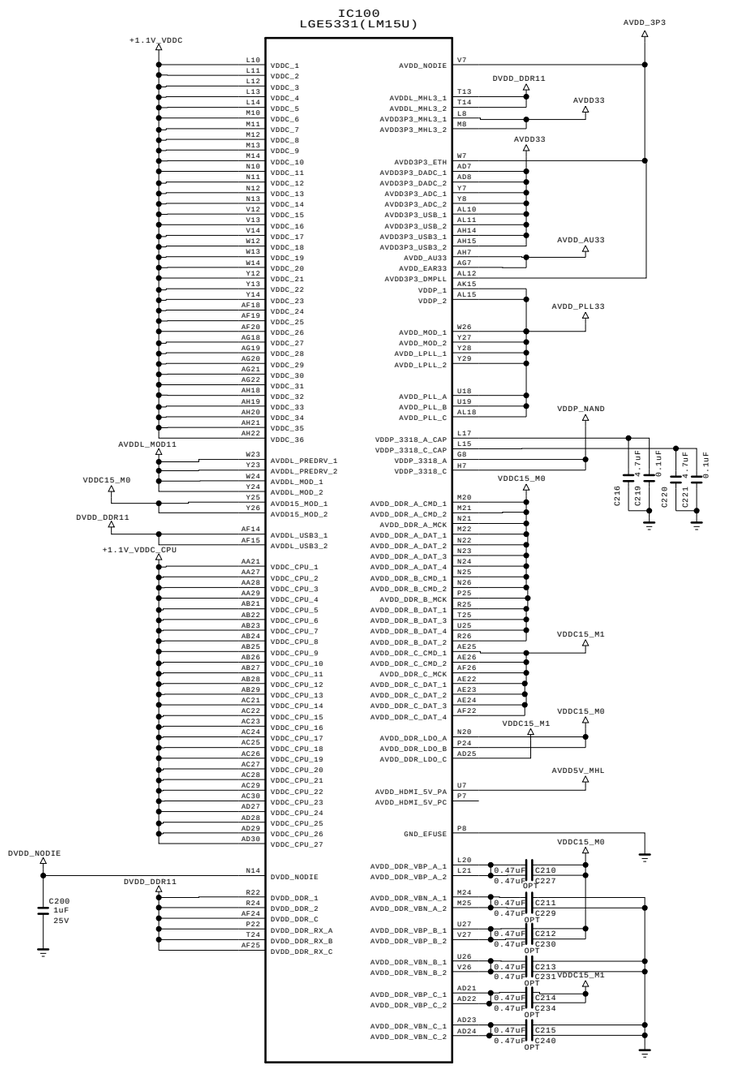

WOL POWER ENABLE CONTROL

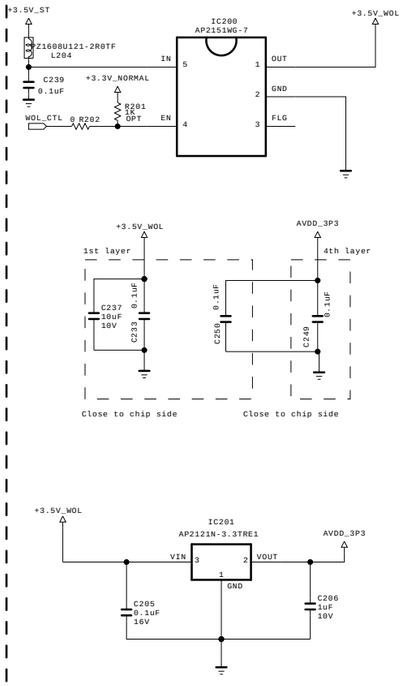

+1.1V_Bypass Cap(CLOSE TO CHIP SIDE)

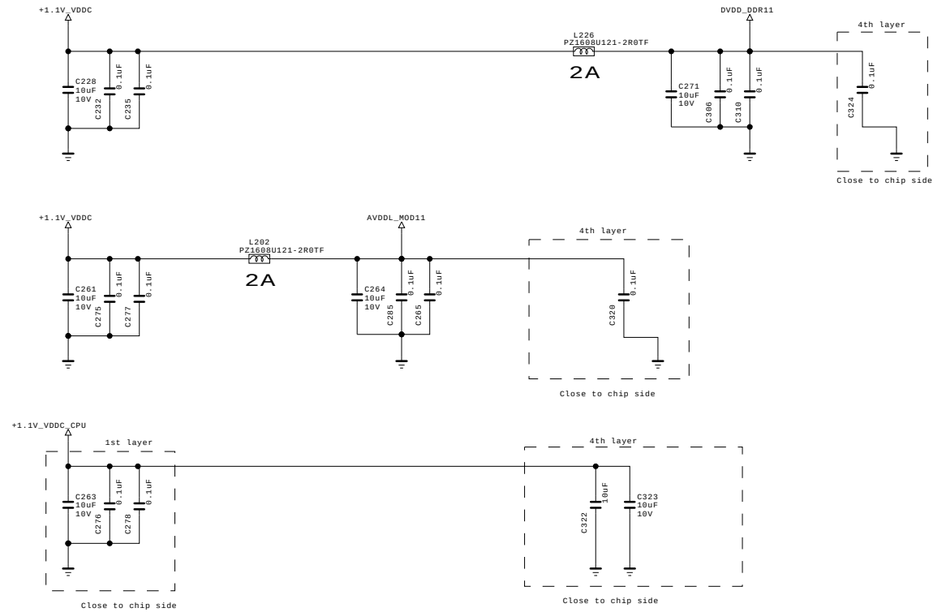

+3.3V_Bypass Cap

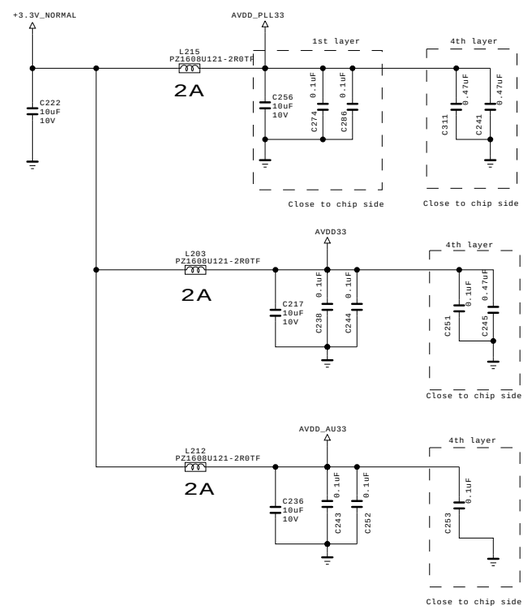

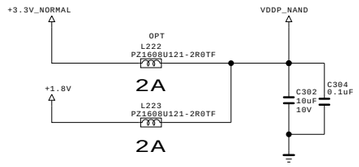

+1.5V_Bypass Cap

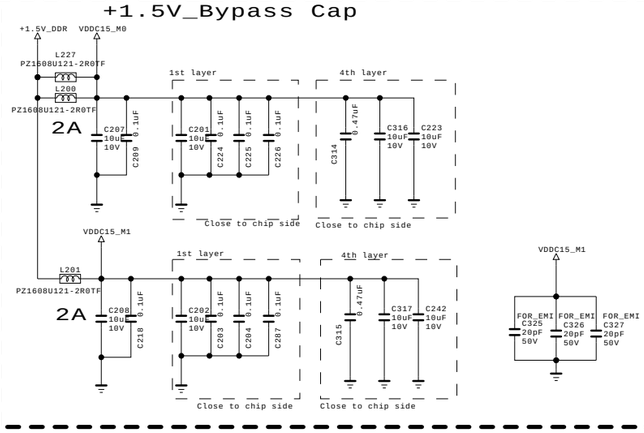

GND JIG POINT

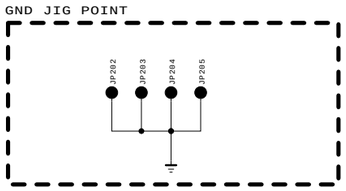

THE ⚠ SYMBOL MARK OF THIS SCHEMETIC DIAGRAM INCORPORATES SPECIAL FEATURES IMPORTANT FOR PROTECTION FROM X-RADIATION. FIRE AND ELECTRICAL SHOCK HAZARDS, WHEN SERVICING IF IS ESSENTIAL THAT ONLY MANUFACTURES SPECIFIED PARTS BE USED FOR THE CRITICAL COMPONENTS IN THE ⚠ SYMBOL MARK OF THE SCHEMETIC.

SECRET
LGElectronics

LG ELECTRONICS

MODEL	LM15U	DATE	2014-11-26
BLOCK	MAIN2_POWER	SHEET	2

Copyright © 2015 LG Electronics. Inc. All rights reserved.
Only for training and service purposes

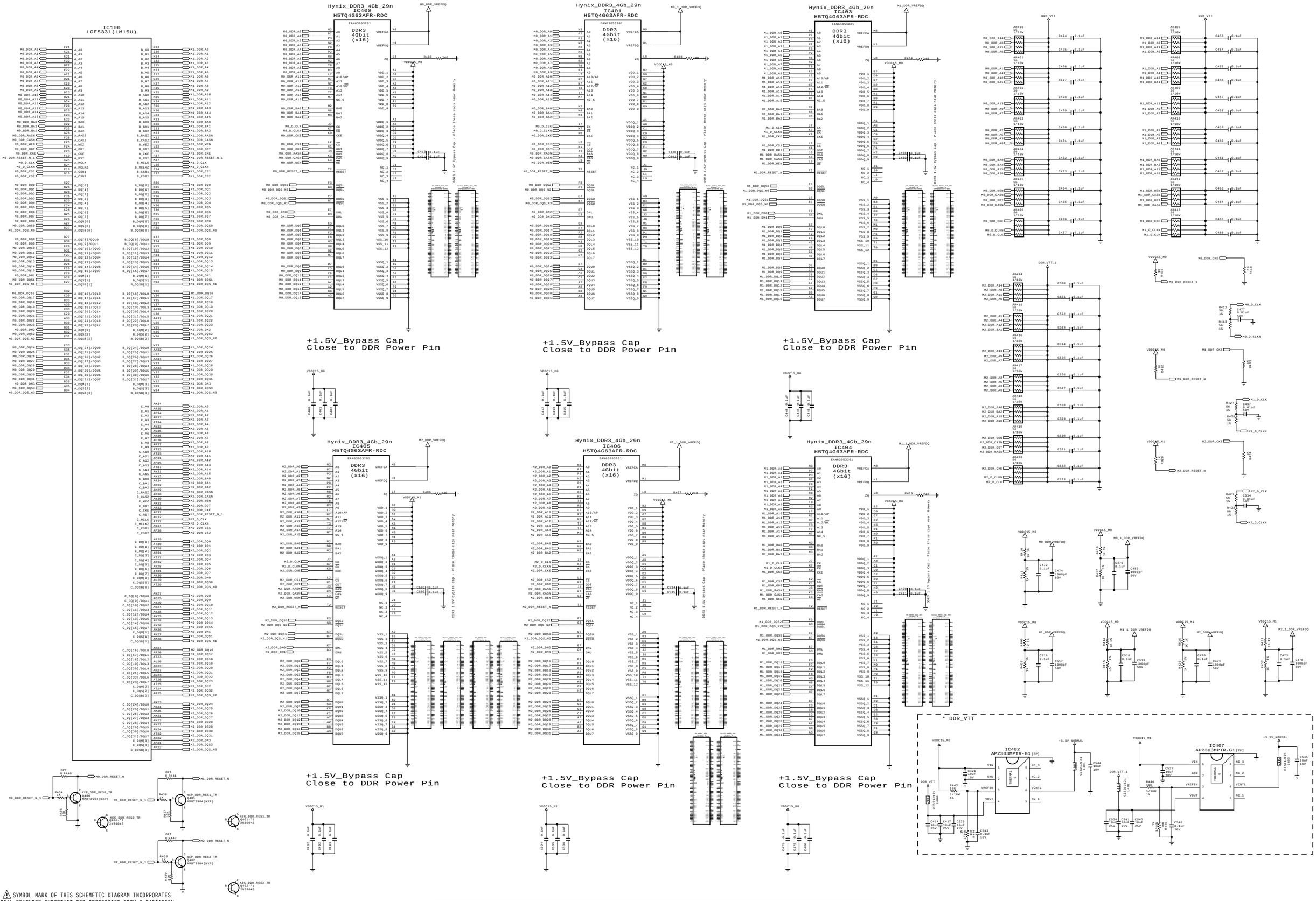

THE ⚠ SYMBOL MARK OF THIS SCHEMETIC DIAGRAM INCORPORATES SPECIAL FEATURES IMPORTANT FOR PROTECTION FROM X-RADIATION. FIRE AND ELECTRICAL SHOCK HAZARDS, WHEN SERVICING IF IS ESSENTIAL THAT ONLY MANUFACTURES SPECIFIED PARTS BE USED FOR THE CRITICAL COMPONENTS IN THE ⚠ SYMBOL MARK OF THE SCHEMETIC.

SECRET
LGElectronics

LG ELECTRONICS

MODEL	LM15U	DATE	2014-12-18
BLOCK	MAIN3_DDR	SHEET	4

Copyright © 2015 LG Electronics. Inc. All rights reserved.
Only for training and service purposes

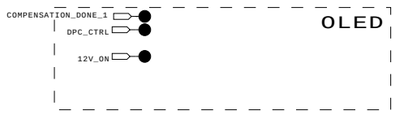

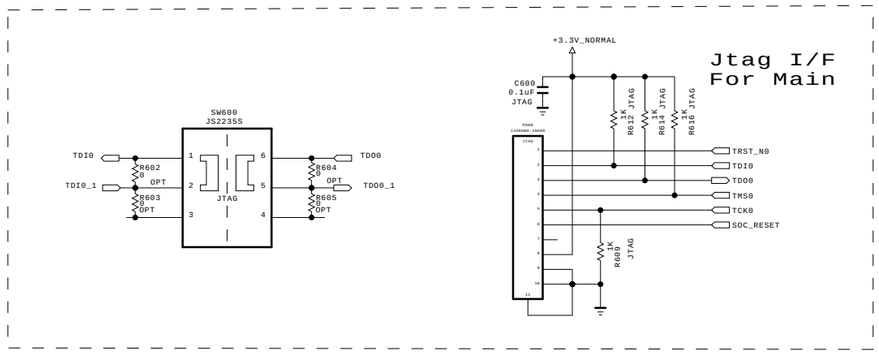

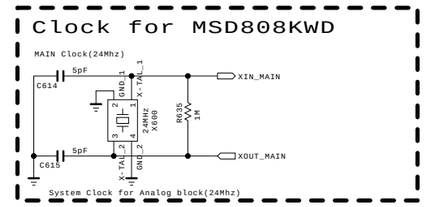

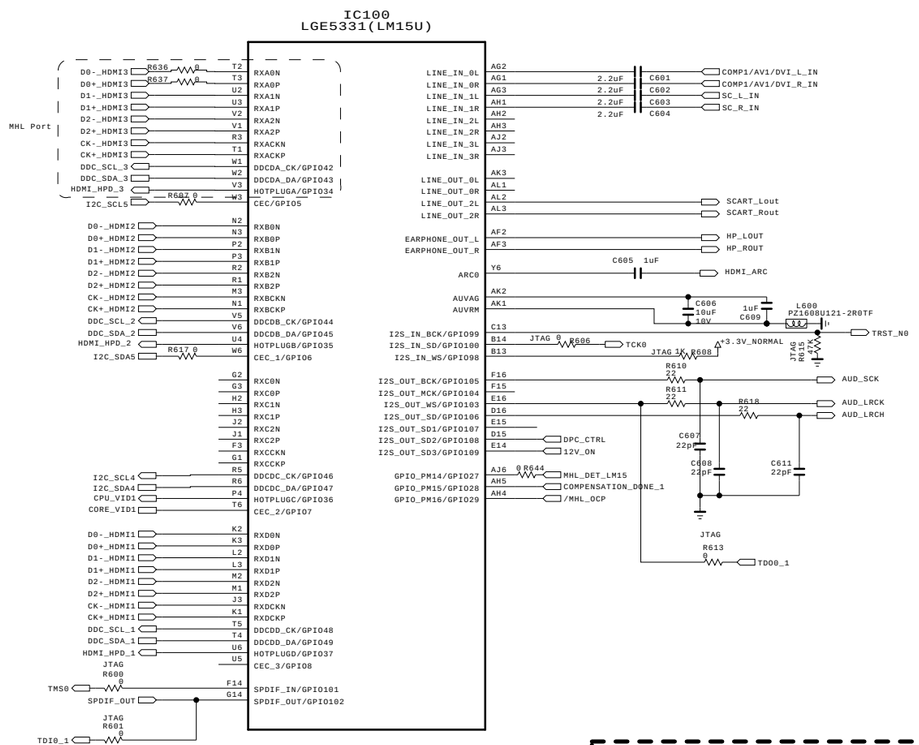

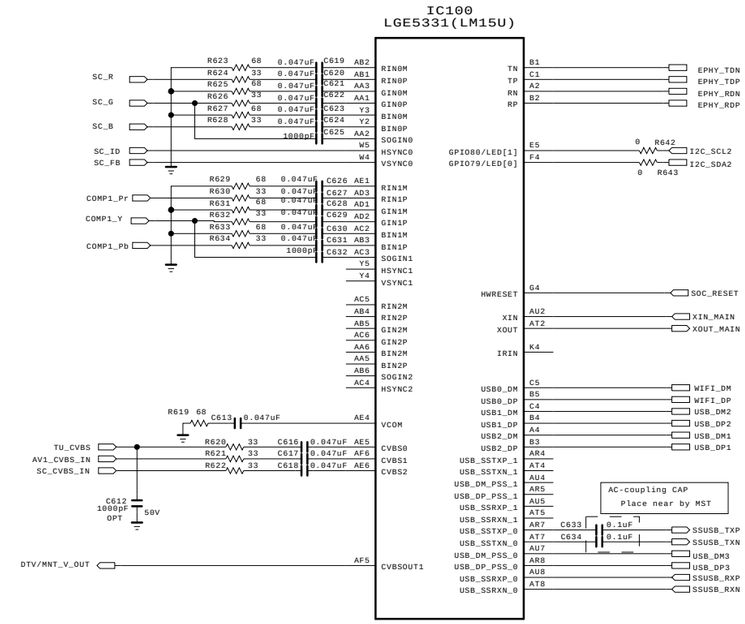

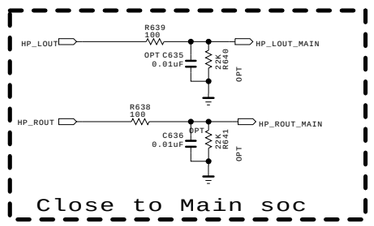

THE ⚠ SYMBOL MARK OF THIS SCHEMETIC DIAGRAM INCORPORATES SPECIAL FEATURES IMPORTANT FOR PROTECTION FROM X-RADIATION. FIRE AND ELECTRICAL SHOCK HAZARDS, WHEN SERVICING IF IS ESSENTIAL THAT ONLY MANUFACTURES SPECIFIED PARTS BE USED FOR THE CRITICAL COMPONENTS IN THE ⚠ SYMBOL MARK OF THE SCHEMETIC.

SECRET
LGElectronics

LG ELECTRONICS

MODEL	LM15U	DATE	2014-11-20
BLOCK	MAIN4_EXT_IN/OUTPUT	SHEET	04

Copyright © 2015 LG Electronics. Inc. All rights reserved.
Only for training and service purposes

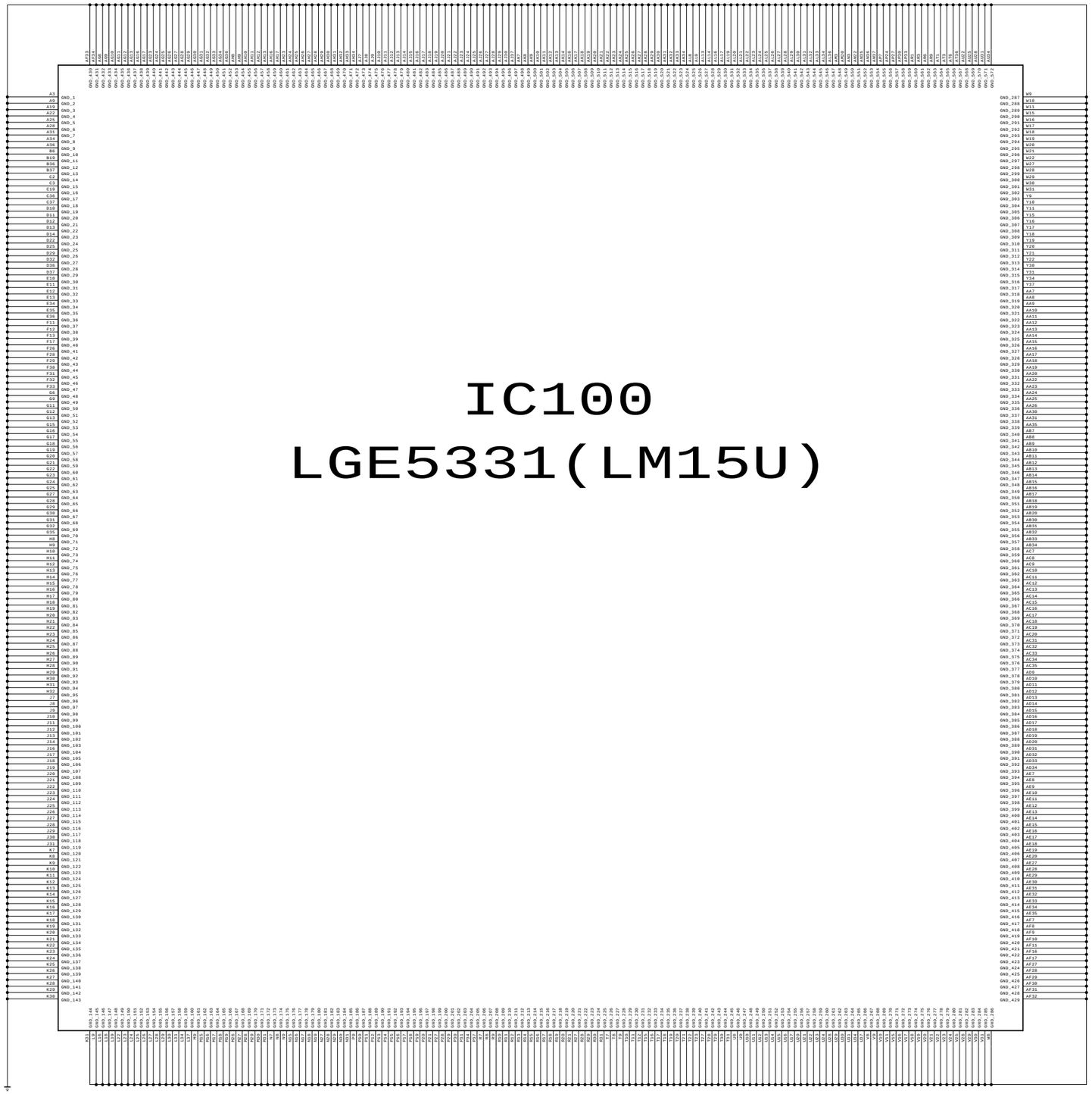

THE ⚠ SYMBOL MARK OF THIS SCHEMETIC DIAGRAM INCORPORATES SPECIAL FEATURES IMPORTANT FOR PROTECTION FROM X-RADIATION. FIRE AND ELECTRICAL SHOCK HAZARDS, WHEN SERVICING IF IS ESSENTIAL THAT ONLY MANUFACTURES SPECIFIED PARTS BE USED FOR THE CRITICAL COMPONENTS IN THE ⚠ SYMBOL MARK OF THE SCHEMETIC.

SECRET
LGElectronics

LG ELECTRONICS

MODEL	LM15U	DATE	2014-1-21
BLOCK	LM15U_GND	SHEET	05 /

Copyright © 2015 LG Electronics. Inc. All rights reserved.
Only for training and service purposes

CI Region

* Option name of this page : CI_SLOT
(because of Hong Kong)

CI SLOT

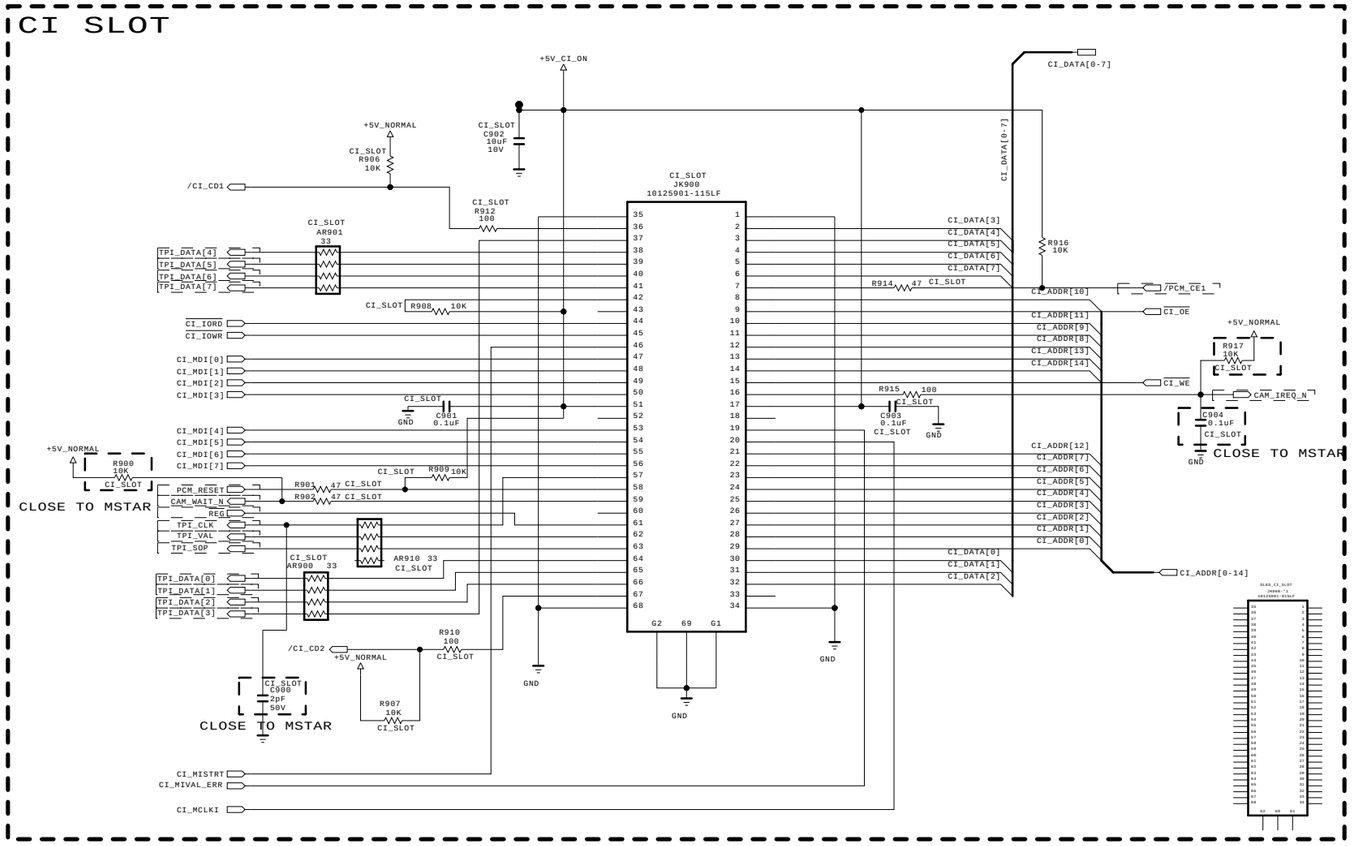

CI TS INPUT

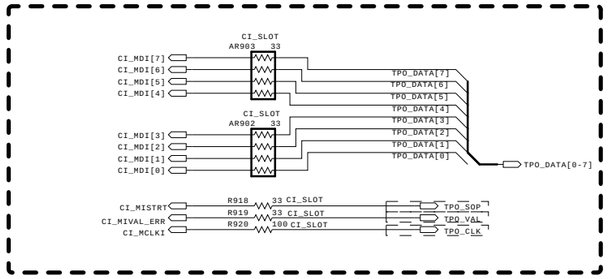

CI HOST I/F

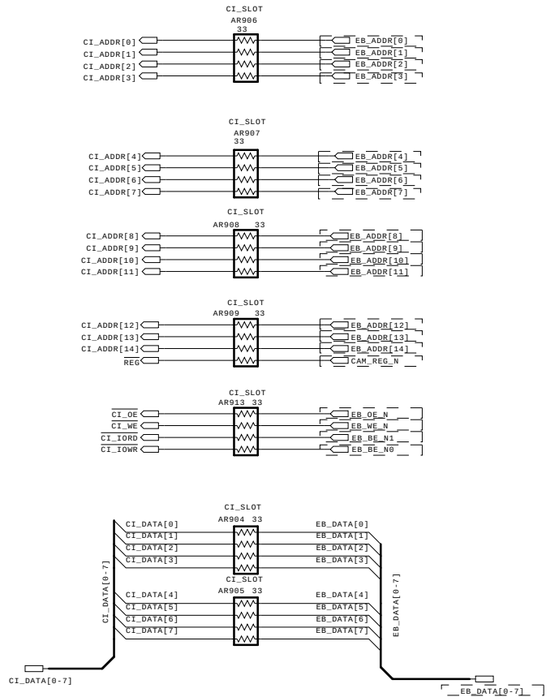

CI DETECT

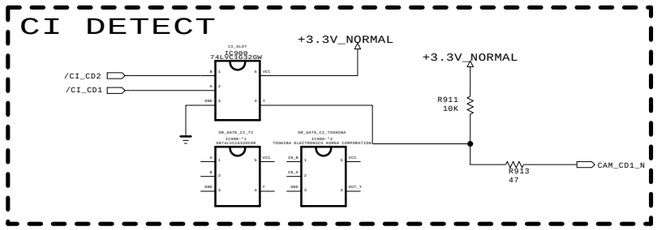

CI POWER ENABLE CONTROL

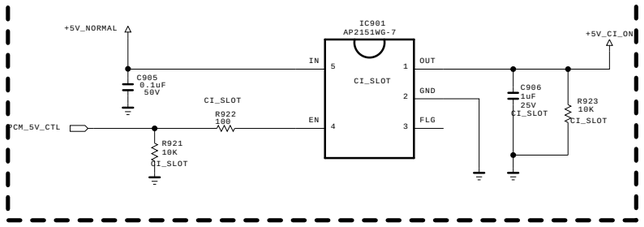

THE ⚠ SYMBOL MARK OF THIS SCHEMETIC DIAGRAM INCORPORATES SPECIAL FEATURES IMPORTANT FOR PROTECTION FROM X-RADIATION. FIRE AND ELECTRICAL SHOCK HAZARDS, WHEN SERVICING IF IS ESSENTIAL THAT ONLY MANUFACTURES SPECIFIED PARTS BE USED FOR THE CRITICAL COMPONENTS IN THE ⚠ SYMBOL MARK OF THE SCHEMETIC.

SECRET
LGElectronics

LG ELECTRONICS

MODEL	LM15U	DATE	2014-10-17
BLOCK	PCMCI	SHEET	9

Copyright © 2015 LG Electronics. Inc. All rights reserved.
Only for training and service purposes

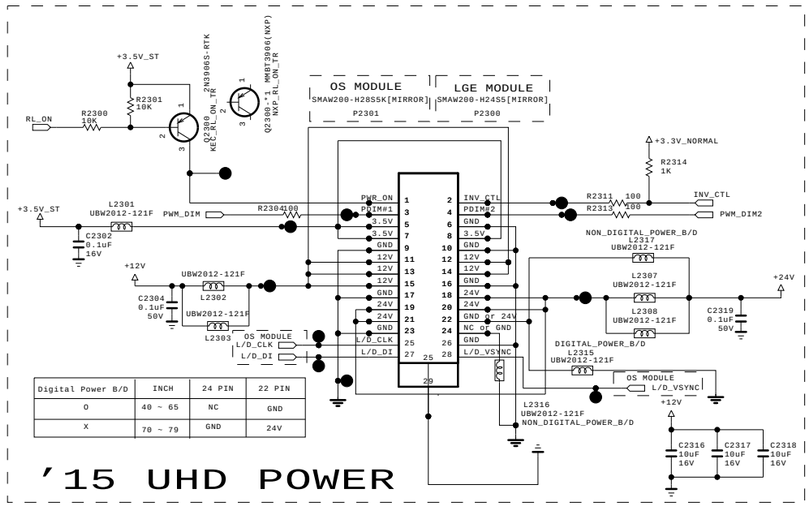

'15 UHD POWER

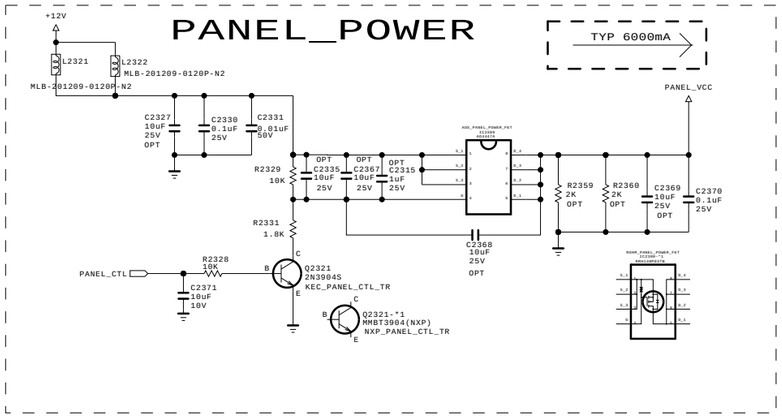

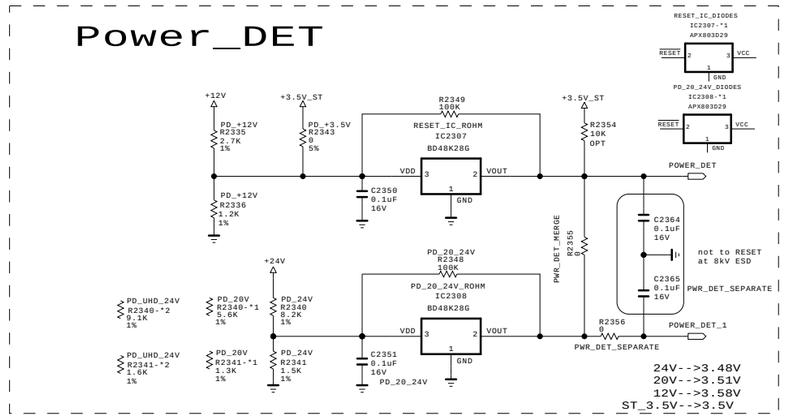

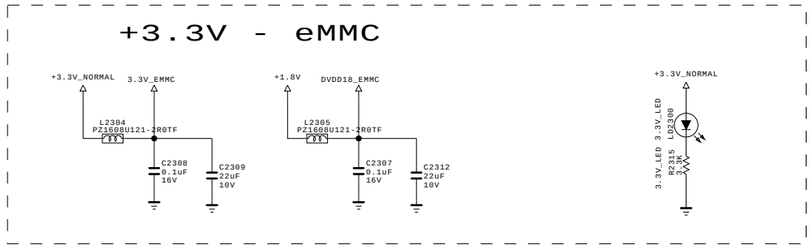

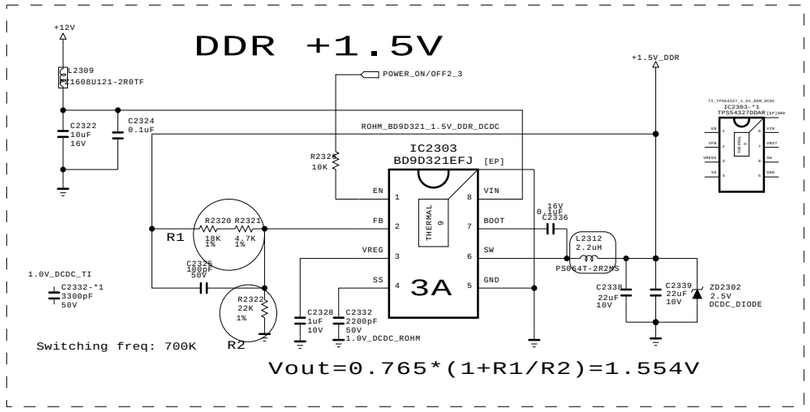

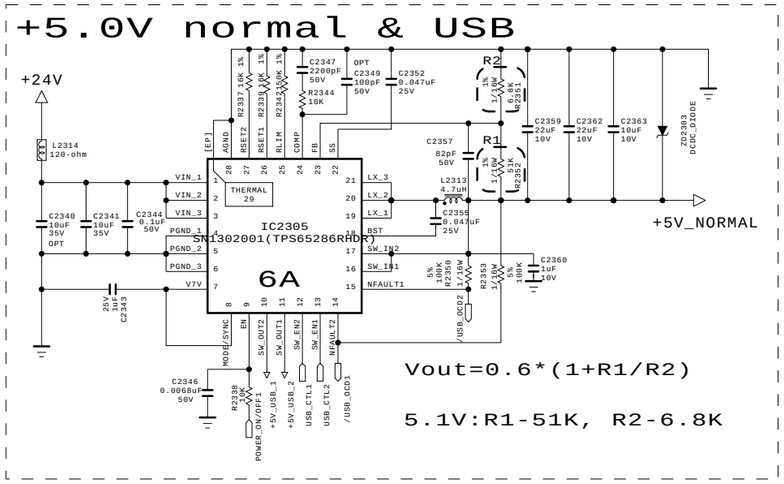

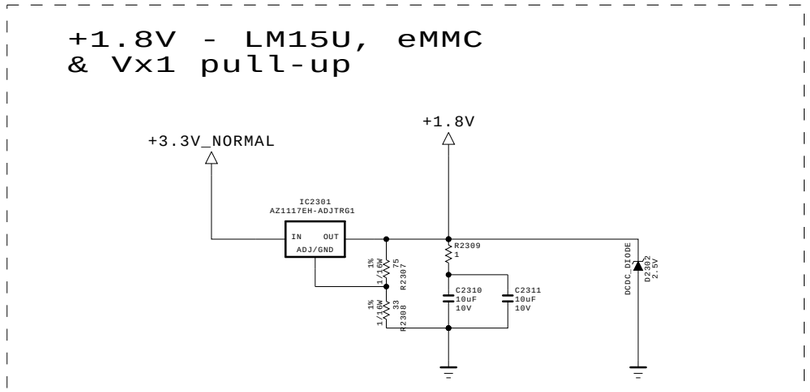

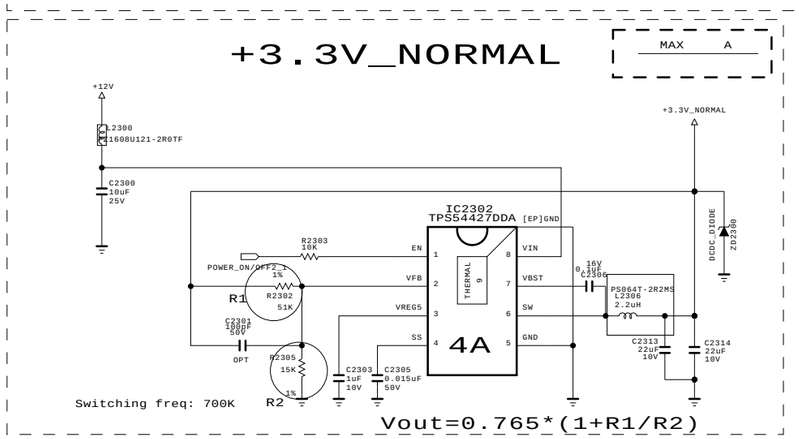

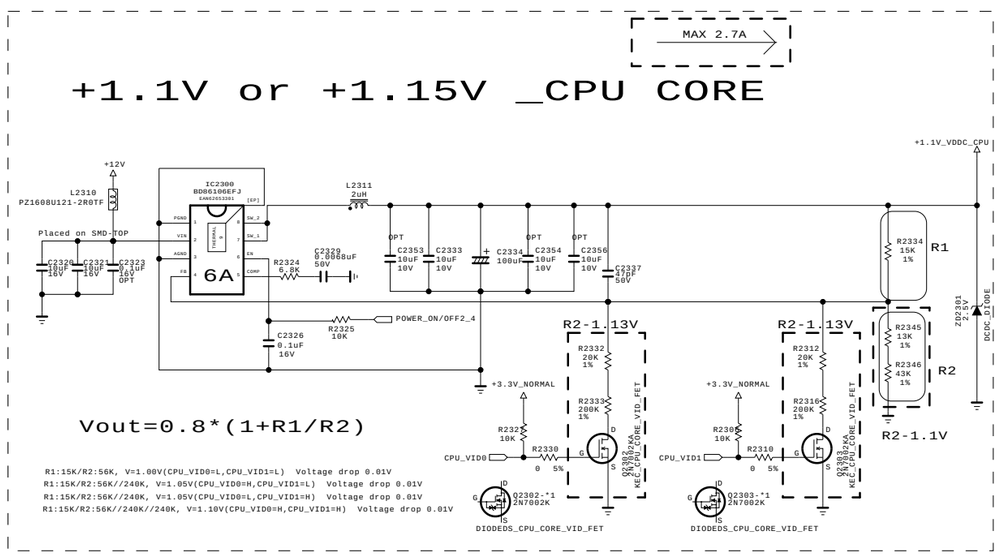

LM15 Power SEQUENCE

POWER_ON/OFF1(5V)

↓

POWER_ON/OFF2_1(3.3V)

↓

POWER_ON/OFF2_3(1.5V, 2.5V)

↓

POWER_ON/OFF2_4(1.1V)

THE ⚠ SYMBOL MARK OF THIS SCHEMETIC DIAGRAM INCORPORATES SPECIAL FEATURES IMPORTANT FOR PROTECTION FROM X-RADIATION. FIRE AND ELECTRICAL SHOCK HAZARDS, WHEN SERVICING IF IS ESSENTIAL THAT ONLY MANUFACTURES SPECIFIED PARTS BE USED FOR THE CRITICAL COMPONENTS IN THE ⚠ SYMBOL MARK OF THE SCHEMETIC.

SECRET
LGElectronics

LG ELECTRONICS

MODEL	LM15U	DATE	2014-12-15
BLOCK	LM15U_PWR_1_UHD	SHEET	23

Copyright © 2015 LG Electronics. Inc. All rights reserved.
Only for training and service purposes

+1.1V or +1.15V _CORE

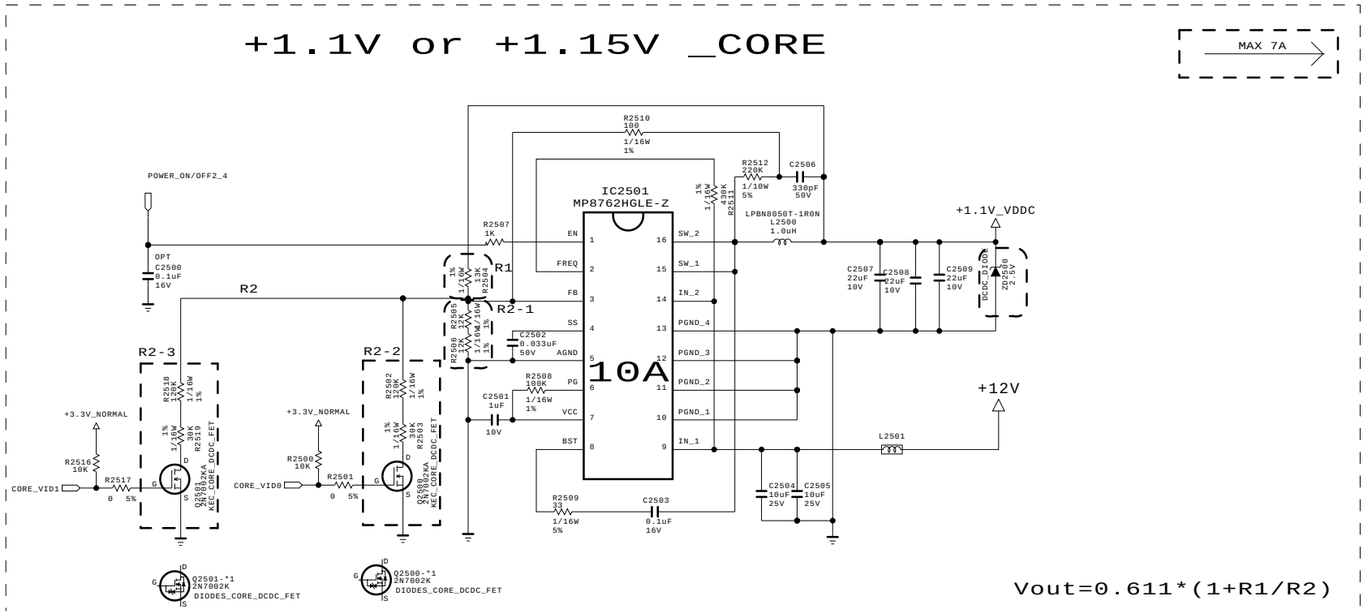

Vout=0.611*(1+R1/R2)

R1:13K/R2:22K, V=0.95V(CORE_VID0=L,CORE_VID1=L) Voltage drop 0.02V
R1:13K/R2:22K//150K, V=1.00V(CORE_VID0=H,CORE_VID1=L) Voltage drop 0.02V
R1:13K/R2:22K//150K, V=1.00V(CORE_VID0=L,CORE_VID1=H) Voltage drop 0.02V
R1:13K/R2:22K//150K//150K, V=1.05V(CORE_VID0=H,CORE_VID1=H) Voltage drop 0.02V

+2.5V

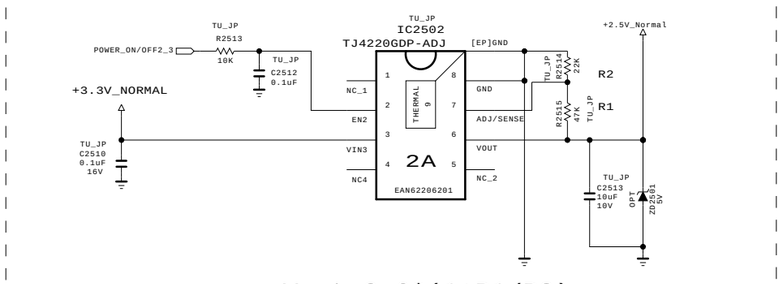

Vout=0.6*(1+R1/R2)

THE ⚠ SYMBOL MARK OF THIS SCHEMETIC DIAGRAM INCORPORATES SPECIAL FEATURES IMPORTANT FOR PROTECTION FROM X-RADIATION. FIRE AND ELECTRICAL SHOCK HAZARDS, WHEN SERVICING IF IS ESSENTIAL THAT ONLY MANUFACTURES SPECIFIED PARTS BE USED FOR THE CRITICAL COMPONENTS IN THE ⚠ SYMBOL MARK OF THE SCHEMETIC.

SECRET
LGElectronics

LG ELECTRONICS

MODEL	LM15U	DATE	2014-11-26
BLOCK	LM15U_PWR_2_ALL	SHEET	25

Copyright © 2015 LG Electronics. Inc. All rights reserved.
Only for training and service purposes

Renesas MICOM

For Debug

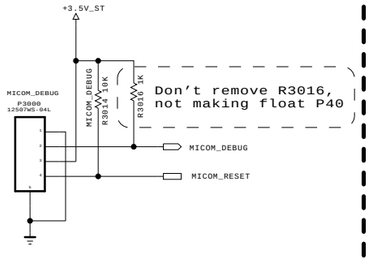

LM15 Power SEQUENCE

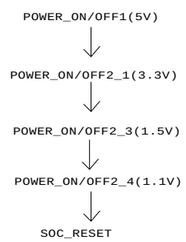

MICOM MODEL OPTION

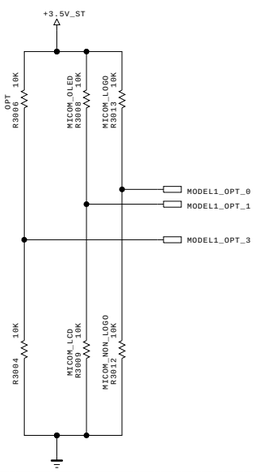

MICOM MODEL OPTION

	0	1
MODEL_OPT_0	NON LOGO	LOGO
MODEL_OPT_1	LCD	OLED
MODEL_OPT_3	LM15U	H15

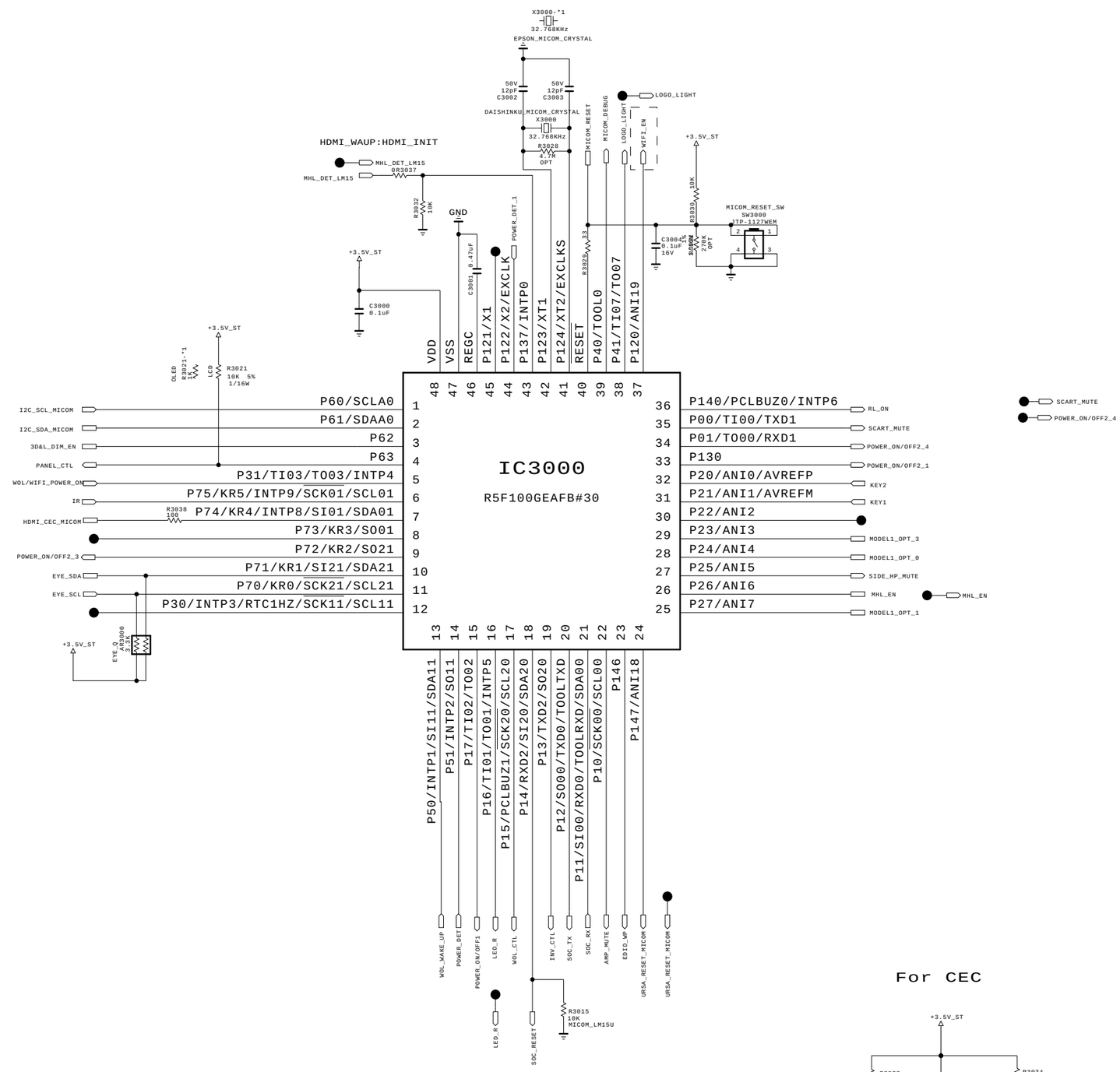

LM15U : Active high reset

For CEC

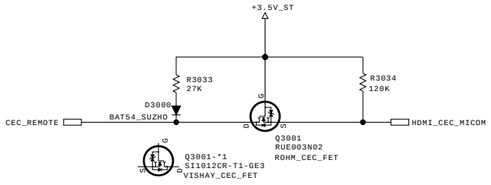

THE ⚠ SYMBOL MARK OF THIS SCHEMETIC DIAGRAM INCORPORATES SPECIAL FEATURES IMPORTANT FOR PROTECTION FROM X-RADIATION. FIRE AND ELECTRICAL SHOCK HAZARDS, WHEN SERVICING IF IS ESSENTIAL THAT ONLY MANUFACTURES SPECIFIED PARTS BE USED FOR THE CRITICAL COMPONENTS IN THE ⚠ SYMBOL MARK OF THE SCHEMETIC.

SECRET
LGElectronics

LG ELECTRONICS

MODEL	LM15U	DATE	2014-12-30
BLOCK	MICOM	SHEET	30

Copyright © 2015 LG Electronics. Inc. All rights reserved.
Only for training and service purposes

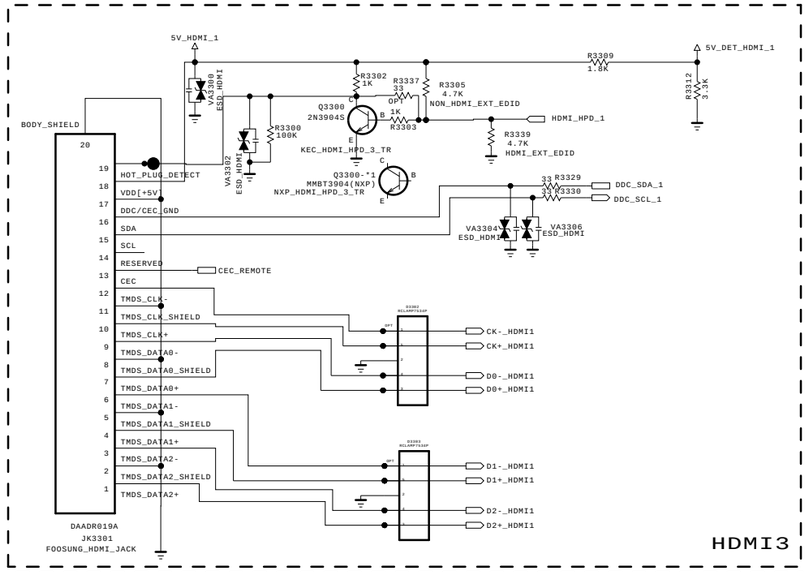

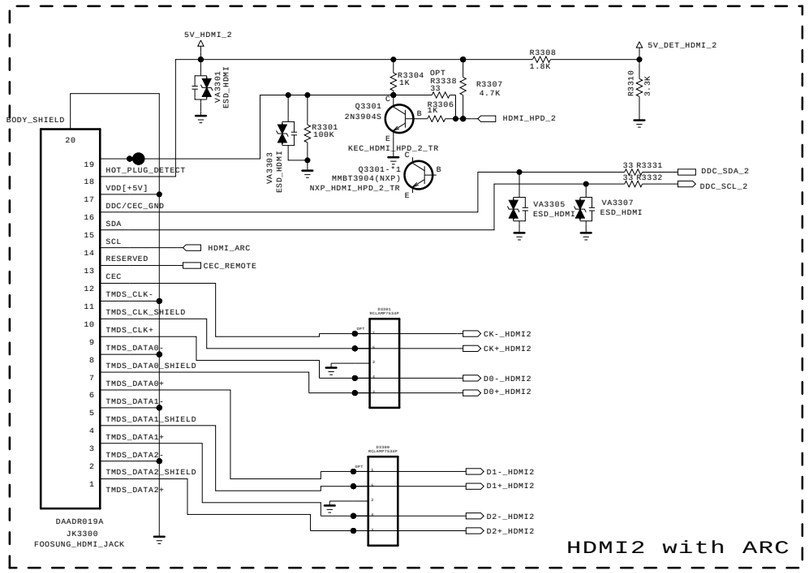

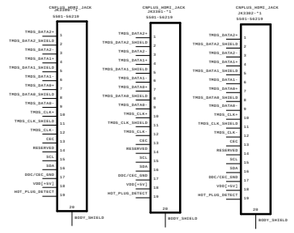

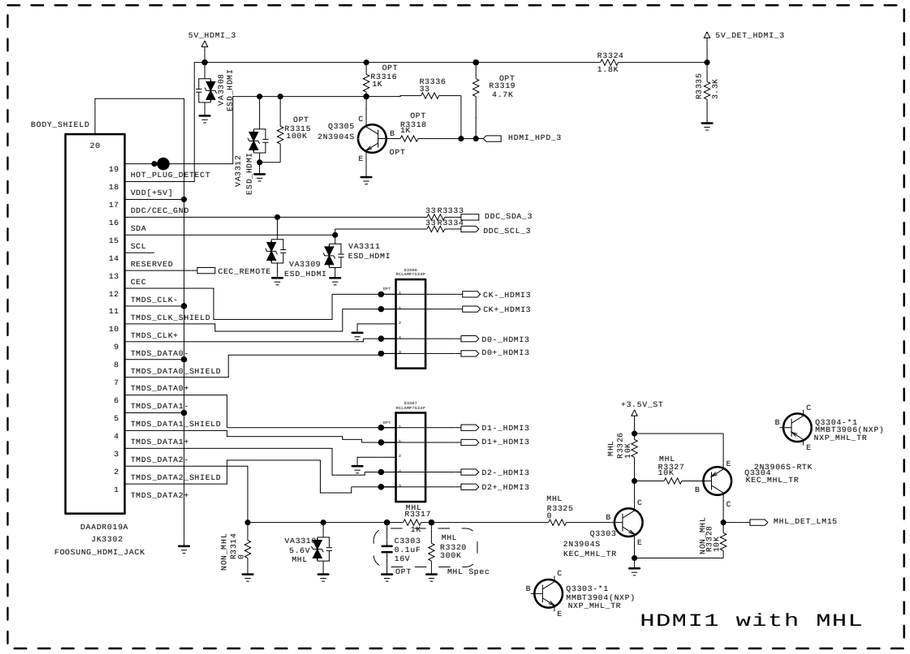

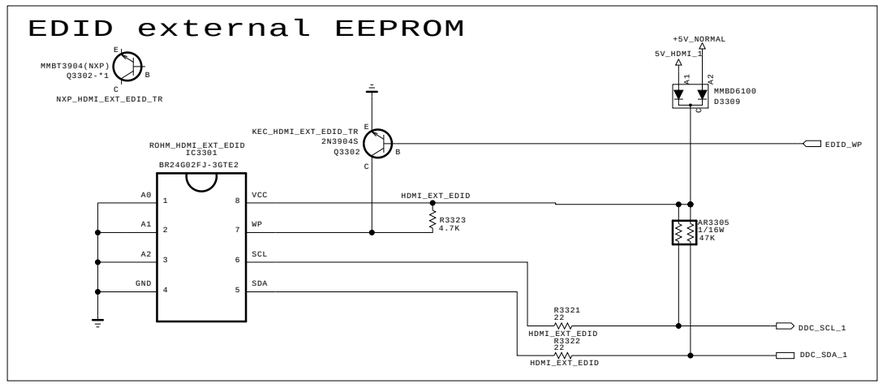

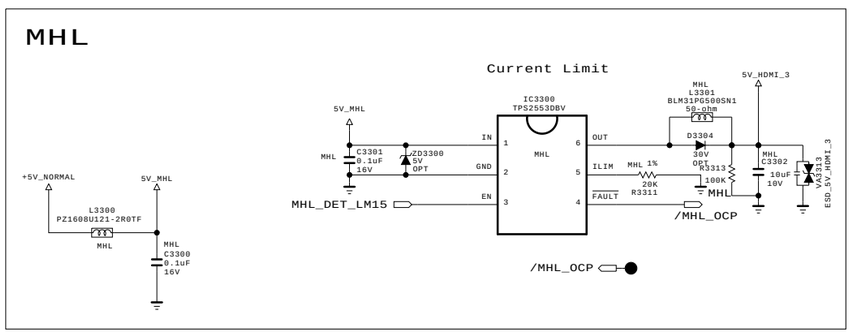

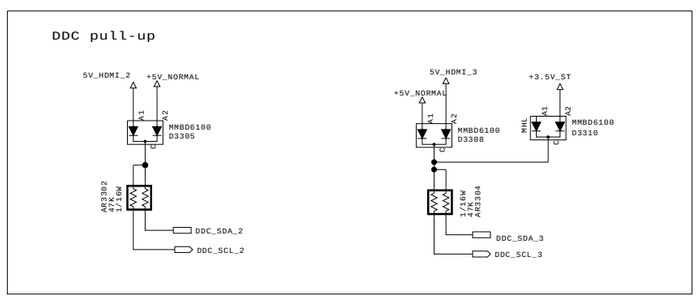

THE ⚠ SYMBOL MARK OF THIS SCHEMETIC DIAGRAM INCORPORATES SPECIAL FEATURES IMPORTANT FOR PROTECTION FROM X-RADIATION. FIRE AND ELECTRICAL SHOCK HAZARDS, WHEN SERVICING IF IS ESSENTIAL THAT ONLY MANUFACTURES SPECIFIED PARTS BE USED FOR THE CRITICAL COMPONENTS IN THE ⚠ SYMBOL MARK OF THE SCHEMETIC.

SECRET
LGElectronics

LG ELECTRONICS

MODEL	LM15U	DATE	2014-11-04
BLOCK	HDMI	SHEET	10

Copyright © 2015 LG Electronics. Inc. All rights reserved.
Only for training and service purposes

SPDIF OUT

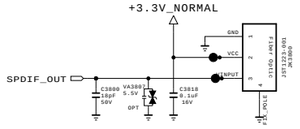

RS232C

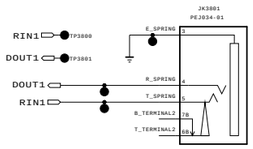

AV/COMPONENT REAR

Place JACK Side

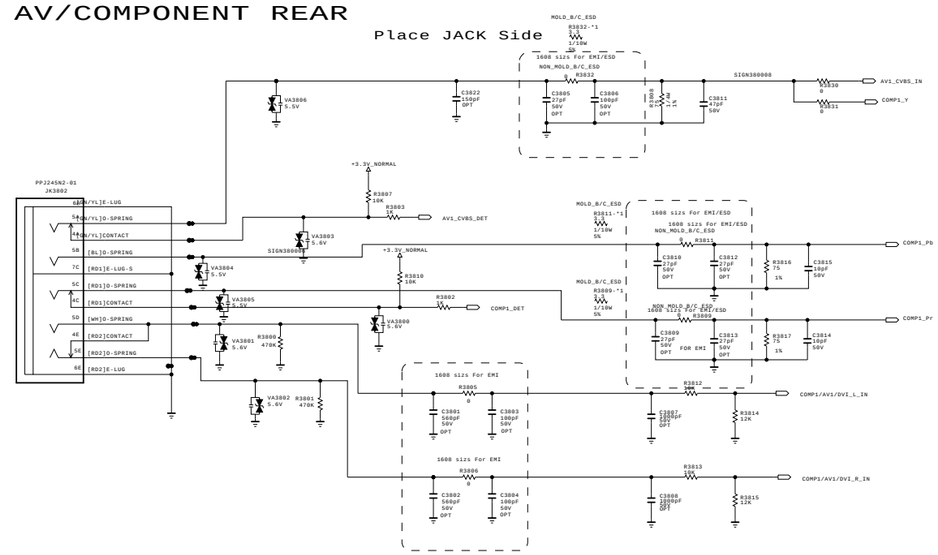

HP OUT

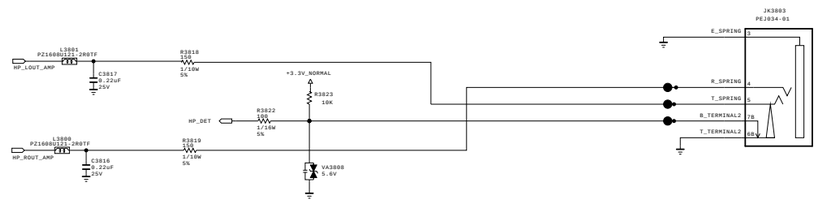

THE ⚠ SYMBOL MARK OF THIS SCHEMETIC DIAGRAM INCORPORATES SPECIAL FEATURES IMPORTANT FOR PROTECTION FROM X-RADIATION. FIRE AND ELECTRICAL SHOCK HAZARDS, WHEN SERVICING IF IS ESSENTIAL THAT ONLY MANUFACTURES SPECIFIED PARTS BE USED FOR THE CRITICAL COMPONENTS IN THE ⚠ SYMBOL MARK OF THE SCHEMETIC.

SECRET
LGElectronics

LG ELECTRONICS

MODEL	LM15U	DATE	2014-12-22
BLOCK	JACK_COMMON_H	SHEET	38

Copyright © 2015 LG Electronics. Inc. All rights reserved.
Only for training and service purposes

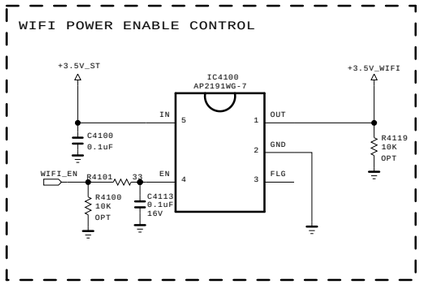

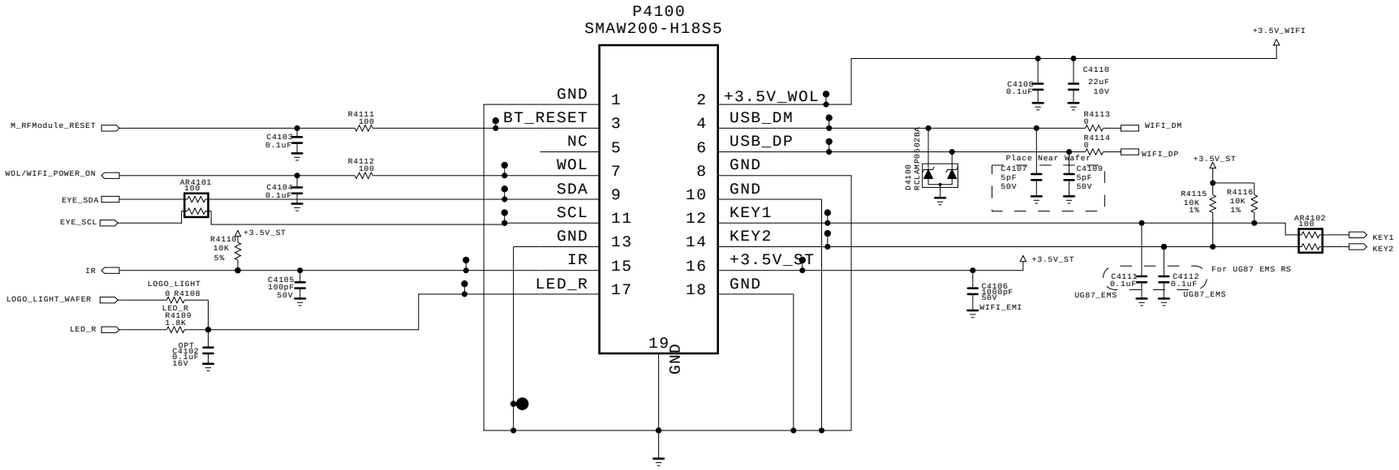

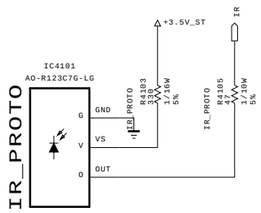

SMD bottom -> Page 135

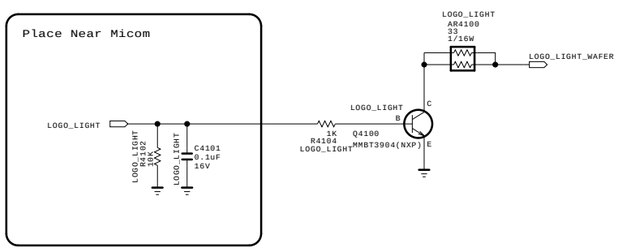

THE ⚠ SYMBOL MARK OF THIS SCHEMETIC DIAGRAM INCORPORATES SPECIAL FEATURES IMPORTANT FOR PROTECTION FROM X-RADIATION. FIRE AND ELECTRICAL SHOCK HAZARDS, WHEN SERVICING IF IS ESSENTIAL THAT ONLY MANUFACTURES SPECIFIED PARTS BE USED FOR THE CRITICAL COMPONENTS IN THE ⚠ SYMBOL MARK OF THE SCHEMETIC.

SECRET
LGElectronics

LG ELECTRONICS

MODEL	LM15U	DATE	2014-12-25
BLOCK	IR/KEY	SHEET	41

Copyright © 2015 LG Electronics. Inc. All rights reserved.
Only for training and service purposes

+5V_USB FOR USB3->USB1

OCP USB3->USB1

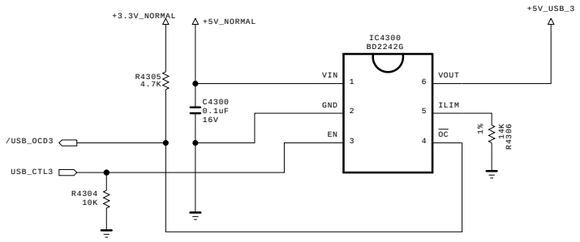

USB1->USB3 MAX 1.0A

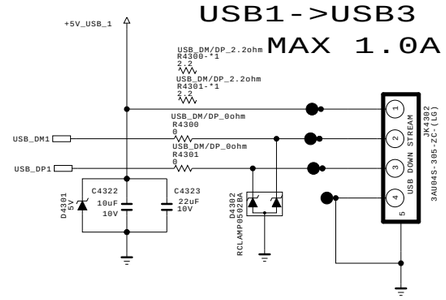

USB2 MAX 1.0A

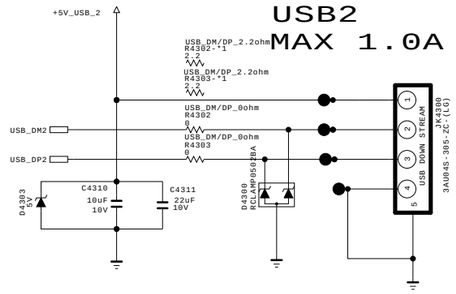

USB3->USB1 (3.0) MAX 1.2A

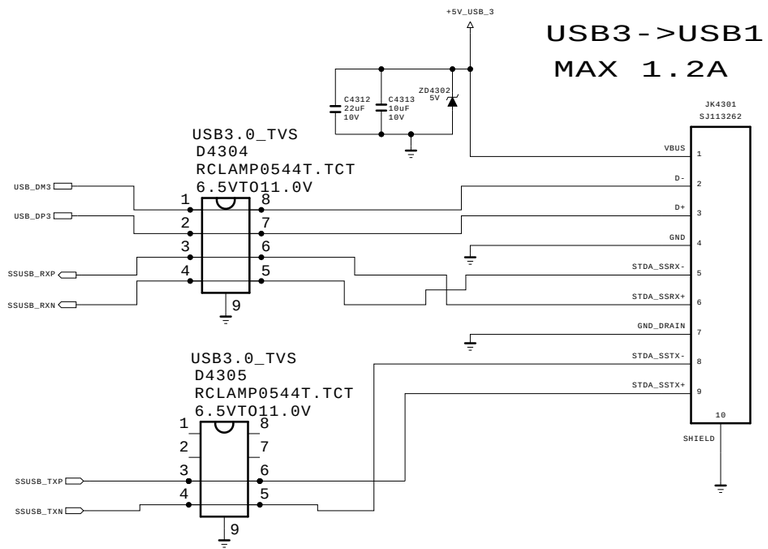

THE ⚠ SYMBOL MARK OF THIS SCHEMETIC DIAGRAM INCORPORATES SPECIAL FEATURES IMPORTANT FOR PROTECTION FROM X-RADIATION. FIRE AND ELECTRICAL SHOCK HAZARDS, WHEN SERVICING IF IS ESSENTIAL THAT ONLY MANUFACTURES SPECIFIED PARTS BE USED FOR THE CRITICAL COMPONENTS IN THE ⚠ SYMBOL MARK OF THE SCHEMETIC.

SECRET
LGElectronics

LG ELECTRONICS

MODEL	LM15U	DATE	2014-12-10
BLOCK	USB3_HUB	SHEET	43

Copyright © 2015 LG Electronics. Inc. All rights reserved.
Only for training and service purposes

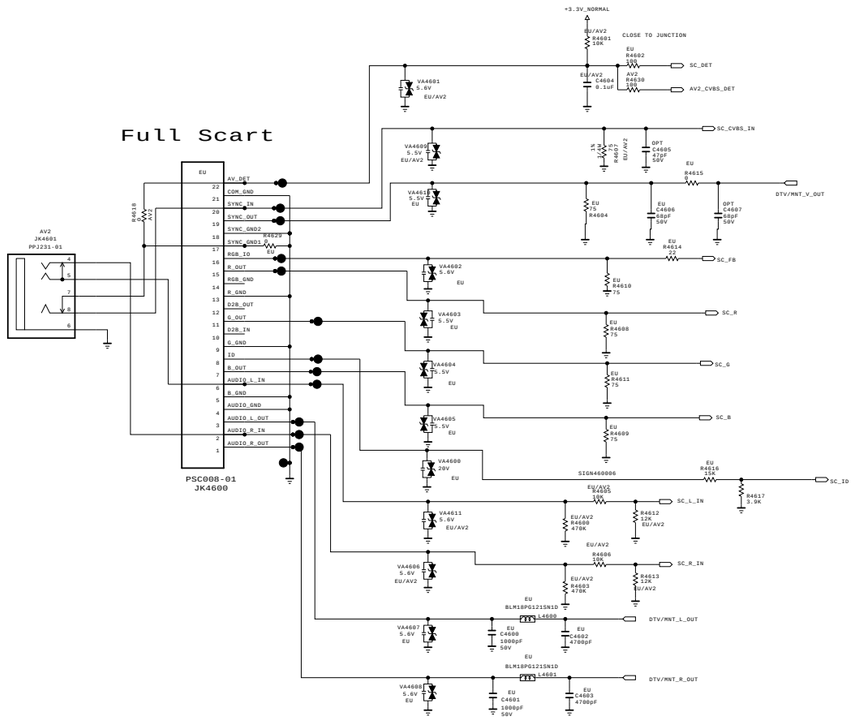

THE ⚠ SYMBOL MARK OF THIS SCHEMETIC DIAGRAM INCORPORATES SPECIAL FEATURES IMPORTANT FOR PROTECTION FROM X-RADIATION. FIRE AND ELECTRICAL SHOCK HAZARDS, WHEN SERVICING IF IS ESSENTIAL THAT ONLY MANUFACTURES SPECIFIED PARTS BE USED FOR THE CRITICAL COMPONENTS IN THE ⚠ SYMBOL MARK OF THE SCHEMETIC.

SECRET
LGElectronics

LG ELECTRONICS

MODEL	LM15U	DATE	2014-12-05
BLOCK	SCART JACK_H	SHEET	46

SCART_JACK_H

Copyright © 2015 LG Electronics. Inc. All rights reserved.
Only for training and service purposes

Ethernet Block

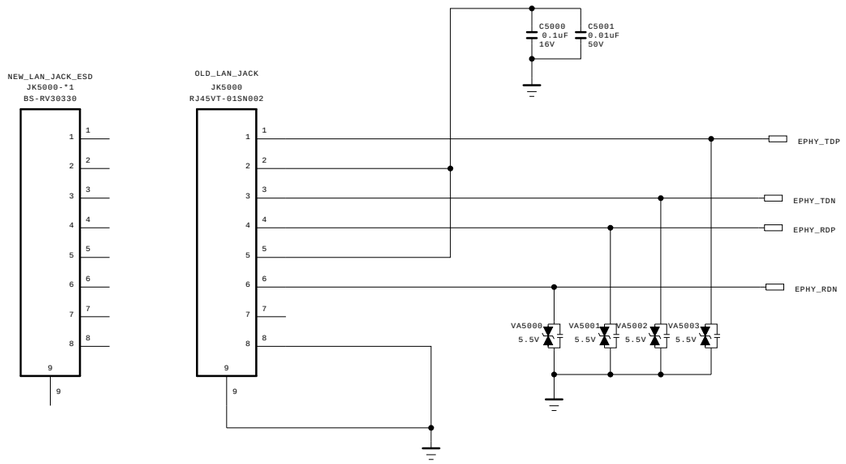

THE ⚠ SYMBOL MARK OF THIS SCHEMETIC DIAGRAM INCORPORATES SPECIAL FEATURES IMPORTANT FOR PROTECTION FROM X-RADIATION. FIRE AND ELECTRICAL SHOCK HAZARDS, WHEN SERVICING IF IS ESSENTIAL THAT ONLY MANUFACTURES SPECIFIED PARTS BE USED FOR THE CRITICAL COMPONENTS IN THE ⚠ SYMBOL MARK OF THE SCHEMETIC.

SECRET
LGElectronics

LG ELECTRONICS

MODEL	LM15U	DATE	2014-12-15
BLOCK	LAN_H	SHEET	50

Copyright © 2015 LG Electronics. Inc. All rights reserved.
Only for training and service purposes

AUDIO AMP(NTP7515)

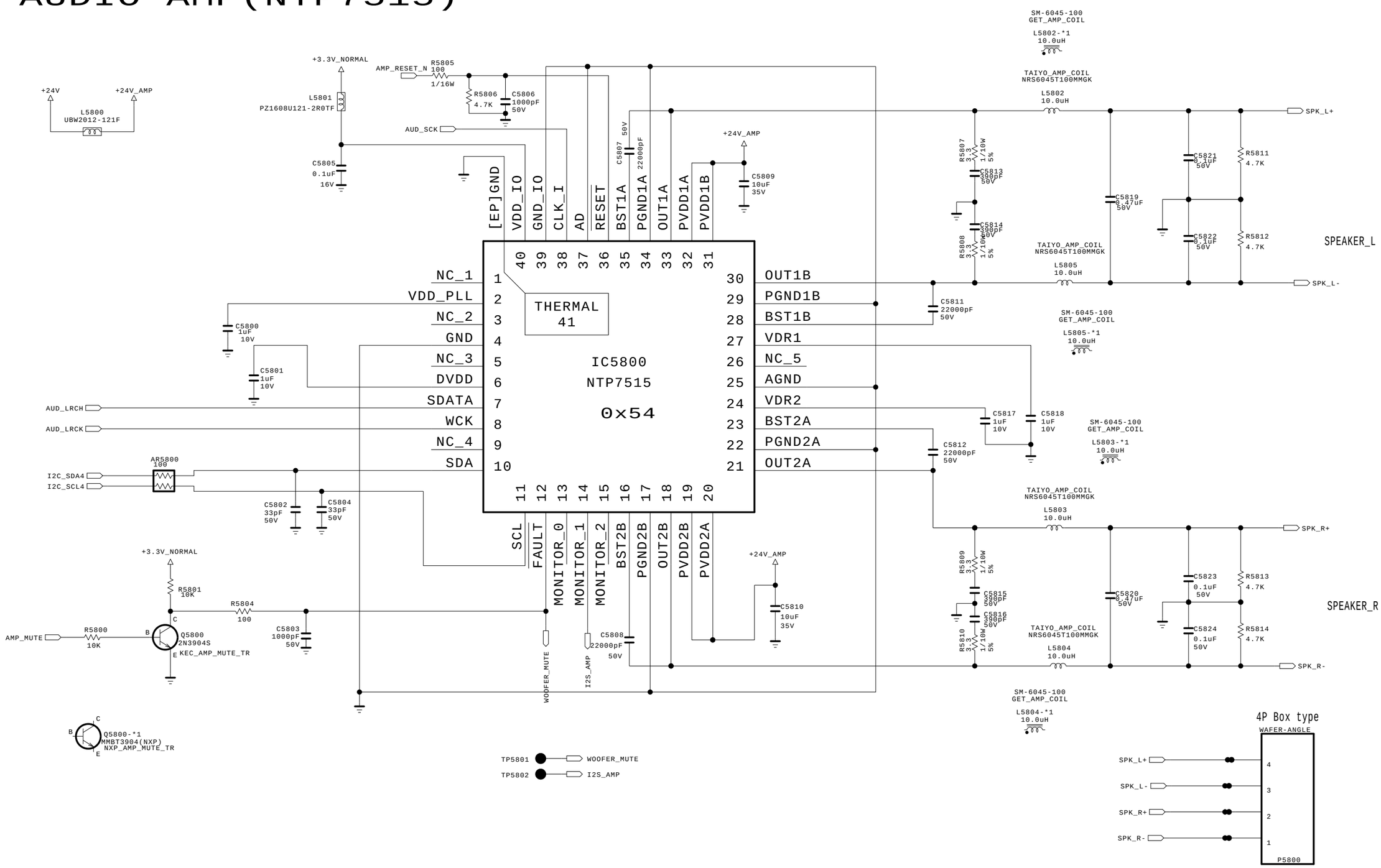

THE ⚠ SYMBOL MARK OF THIS SCHEMETIC DIAGRAM INCORPORATES SPECIAL FEATURES IMPORTANT FOR PROTECTION FROM X-RADIATION. FIRE AND ELECTRICAL SHOCK HAZARDS, WHEN SERVICING IF IS ESSENTIAL THAT ONLY MANUFACTURES SPECIFIED PARTS BE USED FOR THE CRITICAL COMPONENTS IN THE ⚠ SYMBOL MARK OF THE SCHEMETIC.

SECRET
LGElectronics

LG ELECTRONICS

MODEL	LM15U	DATE	2014-10-17
BLOCK	STM_AMP	SHEET	58

Copyright © 2015 LG Electronics. Inc. All rights reserved.
Only for training and service purposes

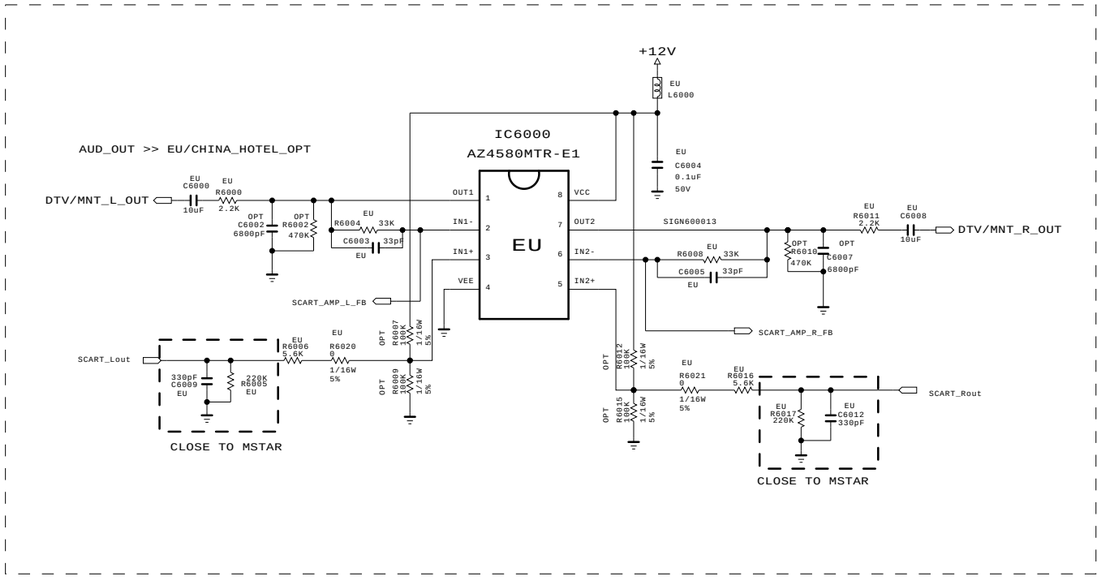

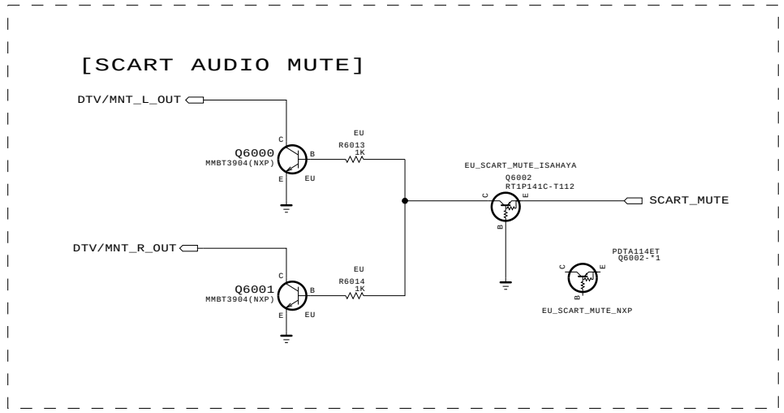

Near Place Scart AMP

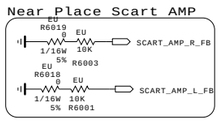

THE ⚠ SYMBOL MARK OF THIS SCHEMETIC DIAGRAM INCORPORATES SPECIAL FEATURES IMPORTANT FOR PROTECTION FROM X-RADIATION. FIRE AND ELECTRICAL SHOCK HAZARDS, WHEN SERVICING IF IS ESSENTIAL THAT ONLY MANUFACTURES SPECIFIED PARTS BE USED FOR THE CRITICAL COMPONENTS IN THE ⚠ SYMBOL MARK OF THE SCHEMETIC.

SECRET
LGElectronics

LG ELECTRONICS

MODEL	UF71/7500	DATE	2014-05-19
BLOCK	SCART AMP	SHEET	17

Copyright © 2015 LG Electronics. Inc. All rights reserved.
Only for training and service purposes

EARPHONE AMP

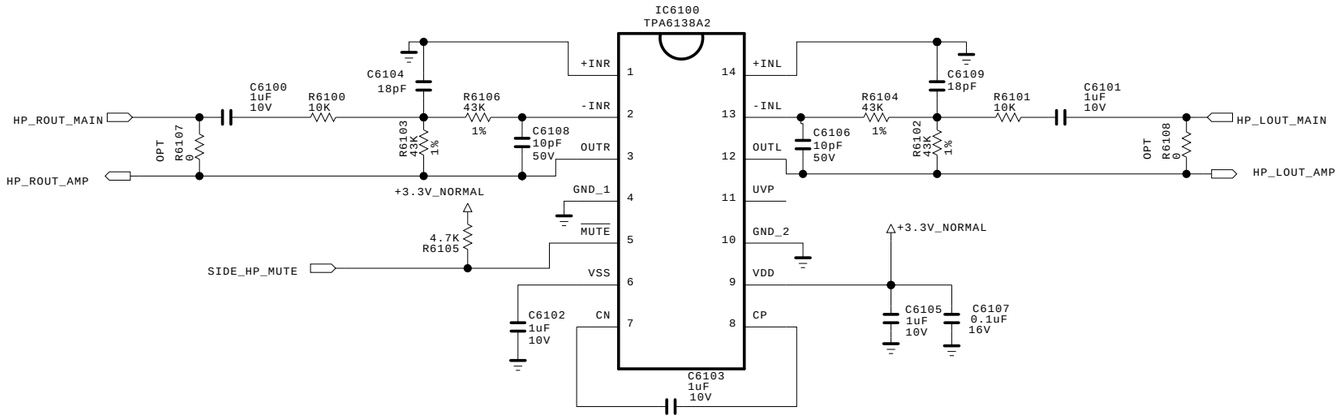

THE ⚠ SYMBOL MARK OF THIS SCHEMETIC DIAGRAM INCORPORATES SPECIAL FEATURES IMPORTANT FOR PROTECTION FROM X-RADIATION. FIRE AND ELECTRICAL SHOCK HAZARDS, WHEN SERVICING IF IS ESSENTIAL THAT ONLY MANUFACTURES SPECIFIED PARTS BE USED FOR THE CRITICAL COMPONENTS IN THE ⚠ SYMBOL MARK OF THE SCHEMETIC.

SECRET
LGElectronics

LG ELECTRONICS

MODEL	LM15U	DATE	2014-11-22
BLOCK	HP_AMP	SHEET	61

Copyright © 2015 LG Electronics. Inc. All rights reserved.
Only for training and service purposes

B-CAS (SMART CARD) INTERFACE

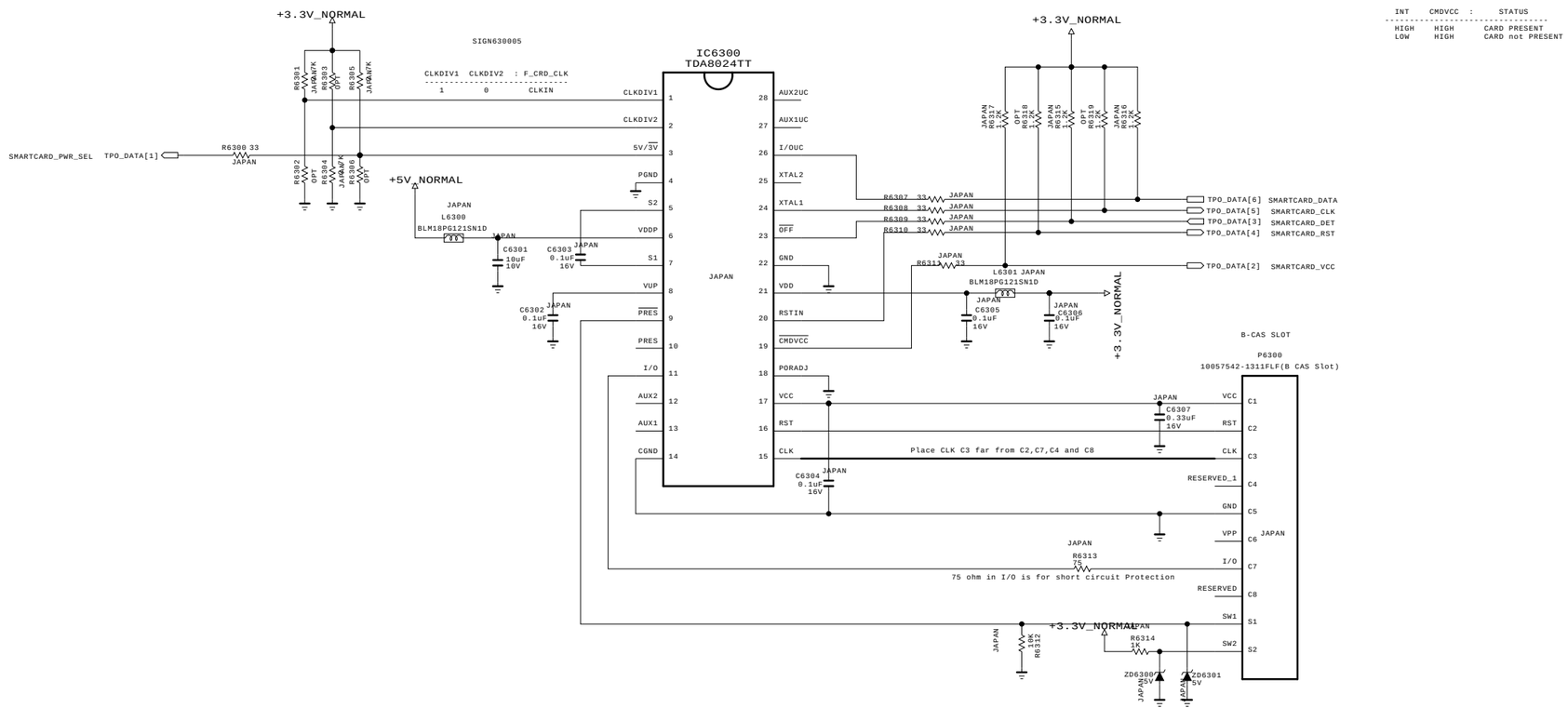

INT	CMDVCC	: STATUS
HIGH	HIGH	CARD PRESENT
LOW	HIGH	CARD not PRESENT

THE ⚠ SYMBOL MARK OF THIS SCHEMETIC DIAGRAM INCORPORATES SPECIAL FEATURES IMPORTANT FOR PROTECTION FROM X-RADIATION. FIRE AND ELECTRICAL SHOCK HAZARDS, WHEN SERVICING IF IS ESSENTIAL THAT ONLY MANUFACTURES SPECIFIED PARTS BE USED FOR THE CRITICAL COMPONENTS IN THE ⚠ SYMBOL MARK OF THE SCHEMETIC.

SECRET
LGElectronics

LG ELECTRONICS

MODEL	JAPAN B-CAS	DATE	2011.04.17
BLOCK		SHEET	63

Copyright © 2015 LG Electronics. Inc. All rights reserved.
Only for training and service purposes

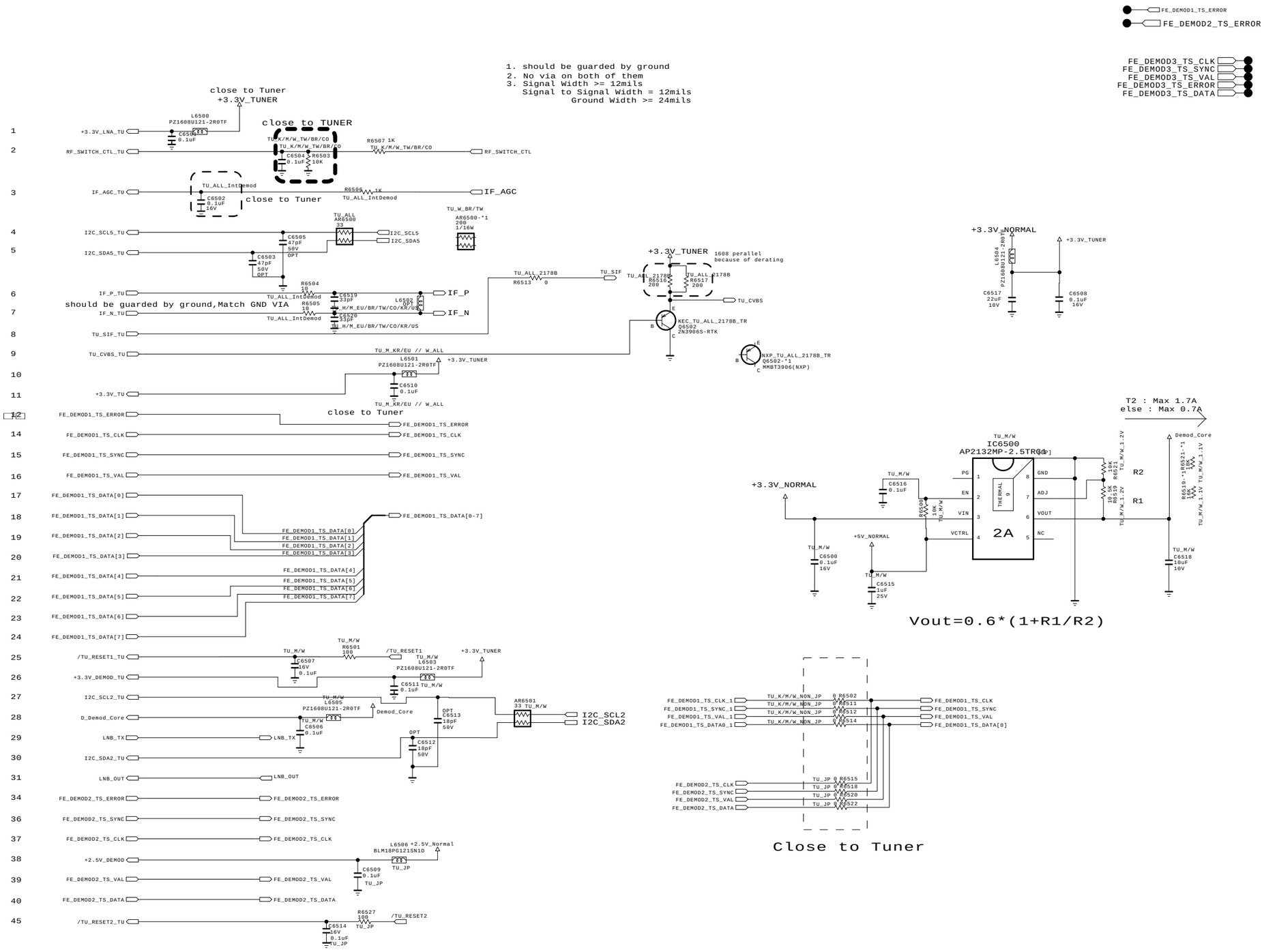

Global F/E Option Name
1. TU
2. Tuner Name = TDJ'H',TDj'M'...
3. Country Name = KR,US,BR,EU ...

Example of Option name
TU_ALL_IntDemod = All Tuner type for Internal demod
TU_M/W = apply TDSM&TDSW Type Tuner

14' Tuner Type for Global
TDJ'H'-G101D : Half NIM for EU,AJJA
TDJ'H'-H101F : Half NIM for US, KR
TDJ'K'-T101F : Half NIM for TW
TDJ'M'-C301D,F : FULL NIM for China
TDJ'M'-B101F : Brazil NIM with Isolater Type
TDJ'M'-K101F : colombia NIM
TDJ'M'-G101D,G105D,G151D : EU Combo&Full NIM
TDJ'M'-H101F,H151F : Korea PIP tuner
TDJ'W'-A151D : AJJA T2 PIP

THE ⚠ SYMBOL MARK OF THIS SCHEMETIC DIAGRAM INCORPORATES SPECIAL FEATURES IMPORTANT FOR PROTECTION FROM X-RADIATION. FIRE AND ELECTRICAL SHOCK HAZARDS, WHEN SERVICING IF IS ESSENTIAL THAT ONLY MANUFACTURES SPECIFIED PARTS BE USED FOR THE CRITICAL COMPONENTS IN THE ⚠ SYMBOL MARK OF THE SCHEMETIC.

SECRET
LGElectronics

LG ELECTRONICS

MODEL	LM15U	DATE	2014-12-30
BLOCK	TU_CIRCUIT	SHEET	65

Copyright © 2015 LG Electronics. Inc. All rights reserved.
Only for training and service purposes

LGE Internal Use Only

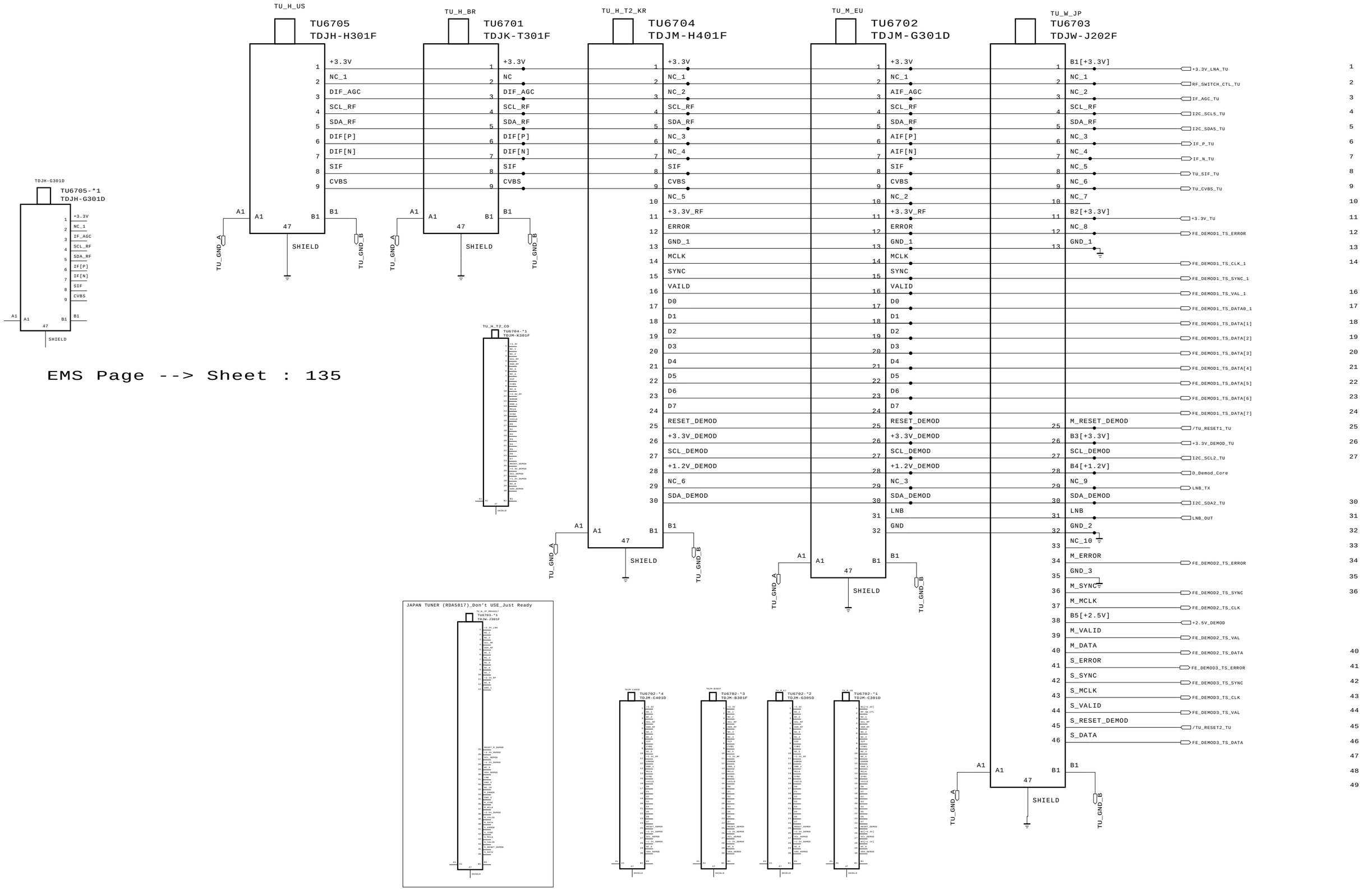

EMS Page --> Sheet : 135

THE ⚠ SYMBOL MARK OF THIS SCHEMETIC DIAGRAM INCORPORATES SPECIAL FEATURES IMPORTANT FOR PROTECTION FROM X-RADIATION. FIRE AND ELECTRICAL SHOCK HAZARDS, WHEN SERVICING IF IS ESSENTIAL THAT ONLY MANUFACTURES SPECIFIED PARTS BE USED FOR THE CRITICAL COMPONENTS IN THE ⚠ SYMBOL MARK OF THE SCHEMETIC.

SECRET
LGElectronics

LG ELECTRONICS

MODEL	LM15U	DATE	2014-09-11
BLOCK	TU_SYMBOL_H	SHEET	19

Copyright © 2015 LG Electronics. Inc. All rights reserved.
Only for training and service purposes

DVB-S2 LNB Part Allegro

(Option:LNB)

3A

Input trace widths should be sized to conduct at least 3A
Ouput trace widths should be sized to conduct at least 2A

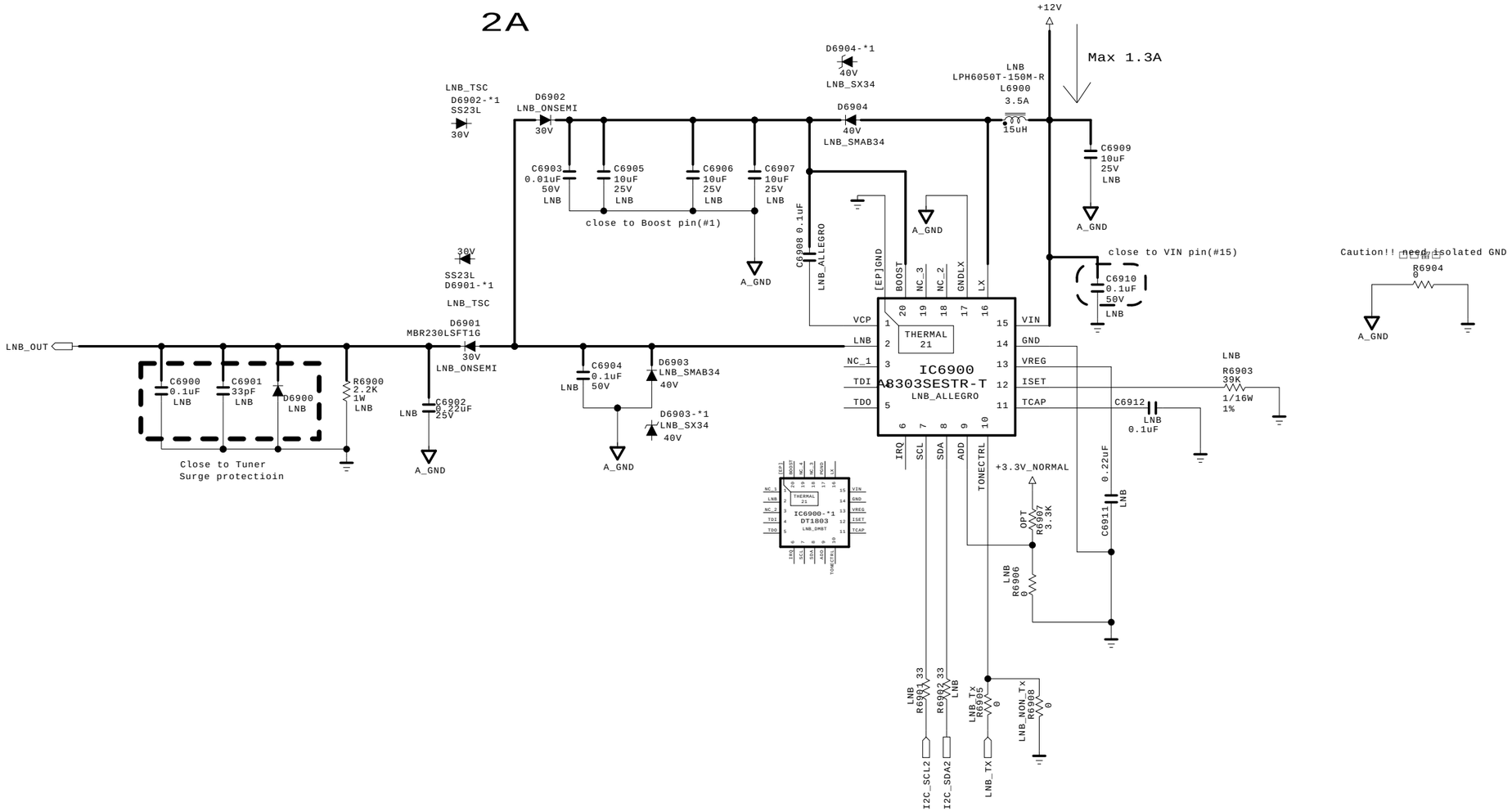

THE ⚠ SYMBOL MARK OF THIS SCHEMETIC DIAGRAM INCORPORATES SPECIAL FEATURES IMPORTANT FOR PROTECTION FROM X-RADIATION. FIRE AND ELECTRICAL SHOCK HAZARDS, WHEN SERVICING IF IS ESSENTIAL THAT ONLY MANUFACTURES SPECIFIED PARTS BE USED FOR THE CRITICAL COMPONENTS IN THE ⚠ SYMBOL MARK OF THE SCHEMETIC.

SECRET
LGElectronics

LG ELECTRONICS

MODEL	LM15U	DATE	2014-08-25
BLOCK	LNB	SHEET	20

Copyright © 2015 LG Electronics. Inc. All rights reserved.
Only for training and service purposes

[51P Vx1 output wafer]
Non REVERSE Type

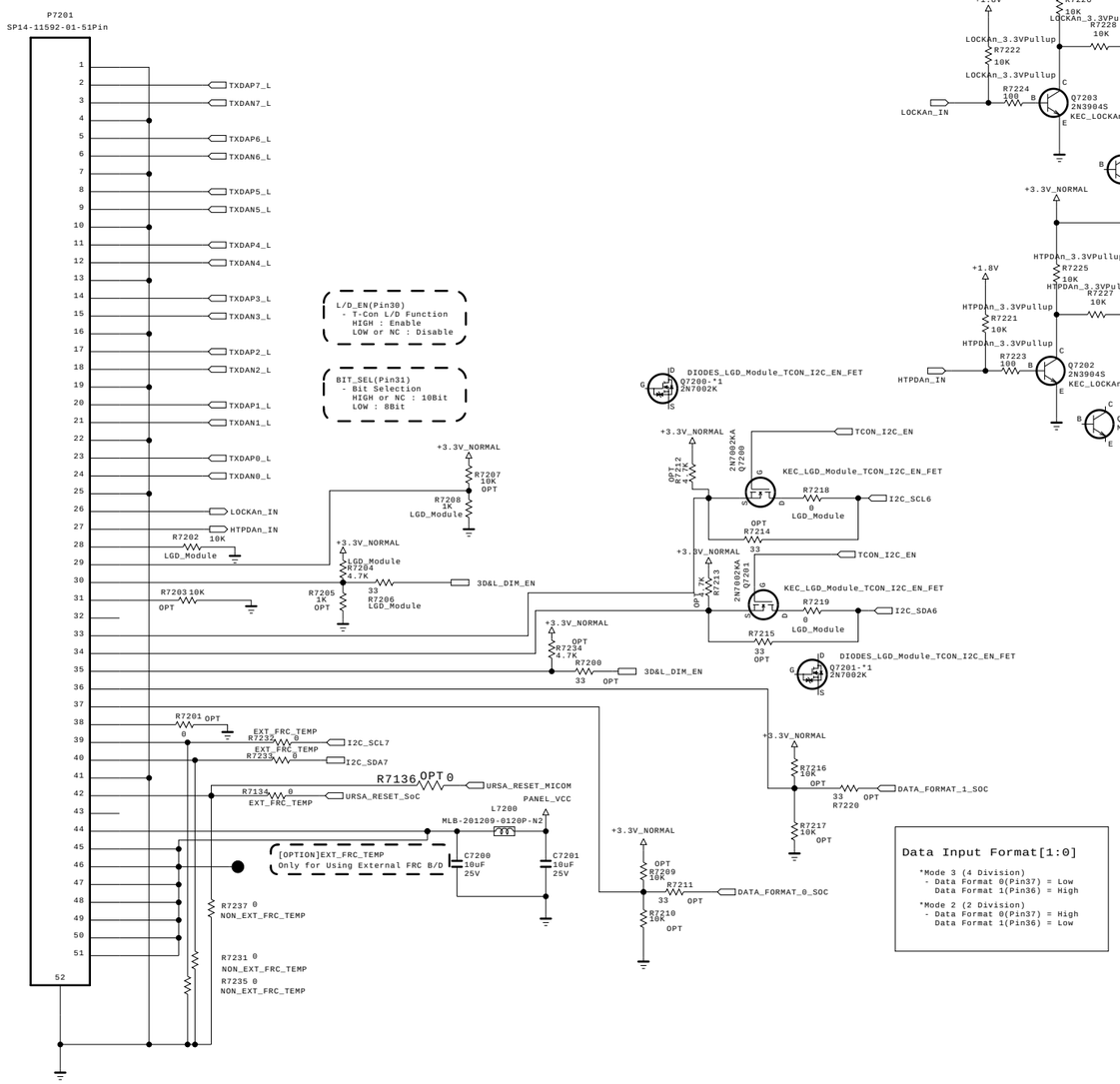

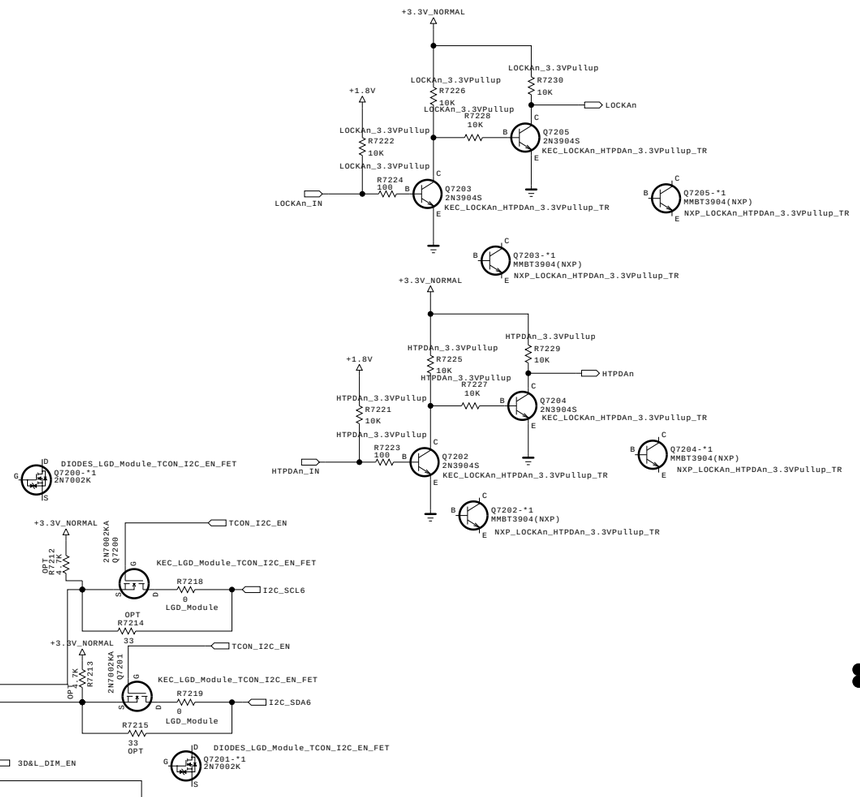

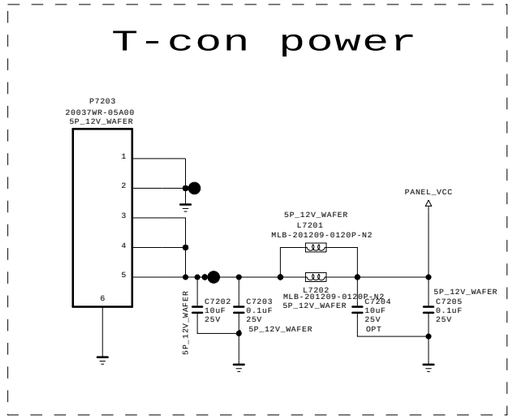

THE ⚠ SYMBOL MARK OF THIS SCHEMETIC DIAGRAM INCORPORATES SPECIAL FEATURES IMPORTANT FOR PROTECTION FROM X-RADIATION. FIRE AND ELECTRICAL SHOCK HAZARDS, WHEN SERVICING IF IS ESSENTIAL THAT ONLY MANUFACTURES SPECIFIED PARTS BE USED FOR THE CRITICAL COMPONENTS IN THE ⚠ SYMBOL MARK OF THE SCHEMETIC.

SECRET
LGElectronics

LG ELECTRONICS

MODEL	LM15U	DATE	2015-01-07
BLOCK	51P Vx1	SHEET	71

Copyright © 2015 LG Electronics. Inc. All rights reserved.
Only for training and service purposes

eMMC I/F

3.3v power delete, 131120

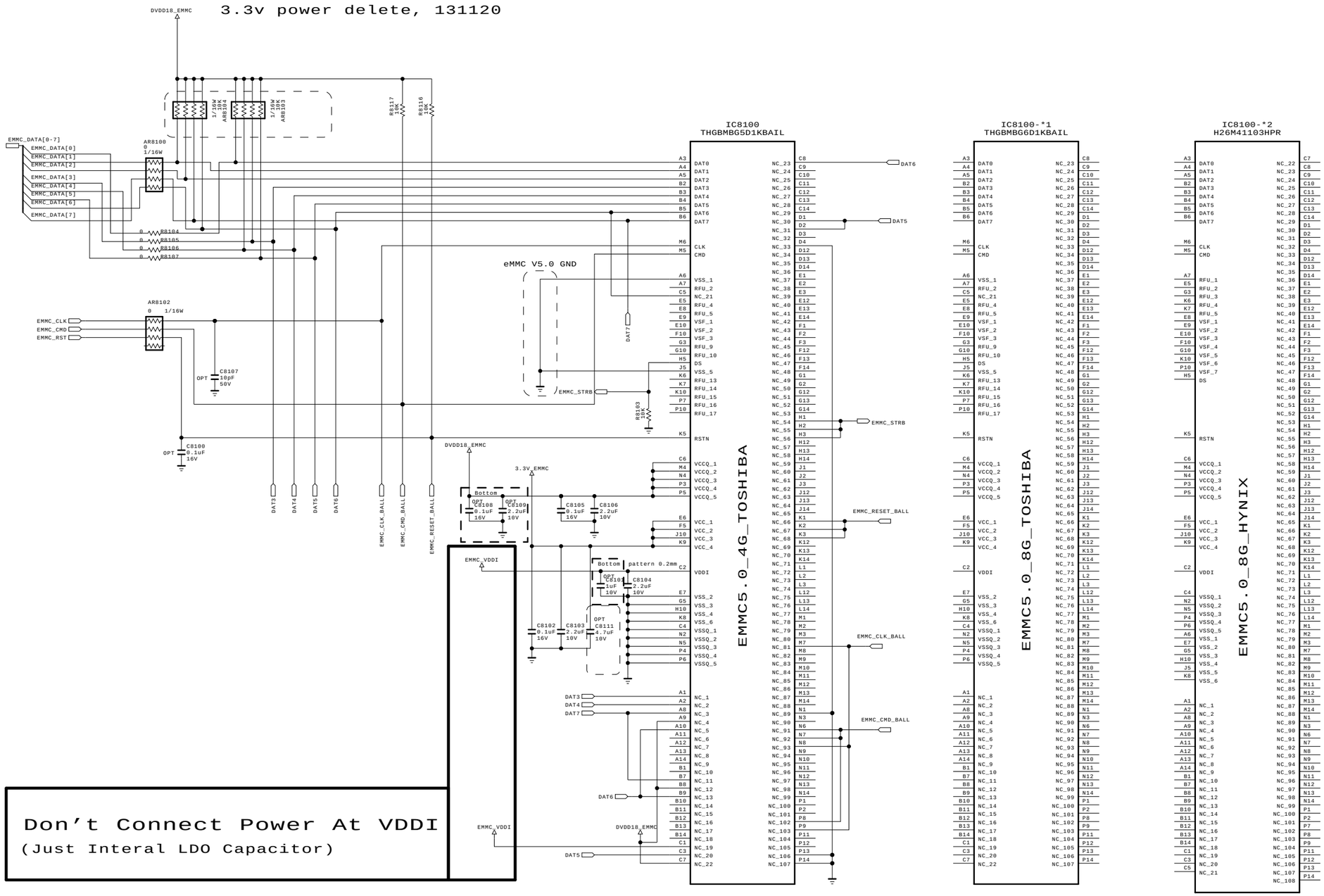

Don't Connect Power At VDDI
(Just Interal LDO Capacitor)

THE ⚠ SYMBOL MARK OF THIS SCHEMETIC DIAGRAM INCORPORATES SPECIAL FEATURES IMPORTANT FOR PROTECTION FROM X-RADIATION. FIRE AND ELECTRICAL SHOCK HAZARDS, WHEN SERVICING IF IS ESSENTIAL THAT ONLY MANUFACTURES SPECIFIED PARTS BE USED FOR THE CRITICAL COMPONENTS IN THE ⚠ SYMBOL MARK OF THE SCHEMETIC.

SECRET
LGElectronics

LG ELECTRONICS

MODEL	LM15U	DATE	2014-11-17
BLOCK	eMMC	SHEET	81

Copyright © 2015 LG Electronics. Inc. All rights reserved.
Only for training and service purposes

RS-232C Control INTERFACE

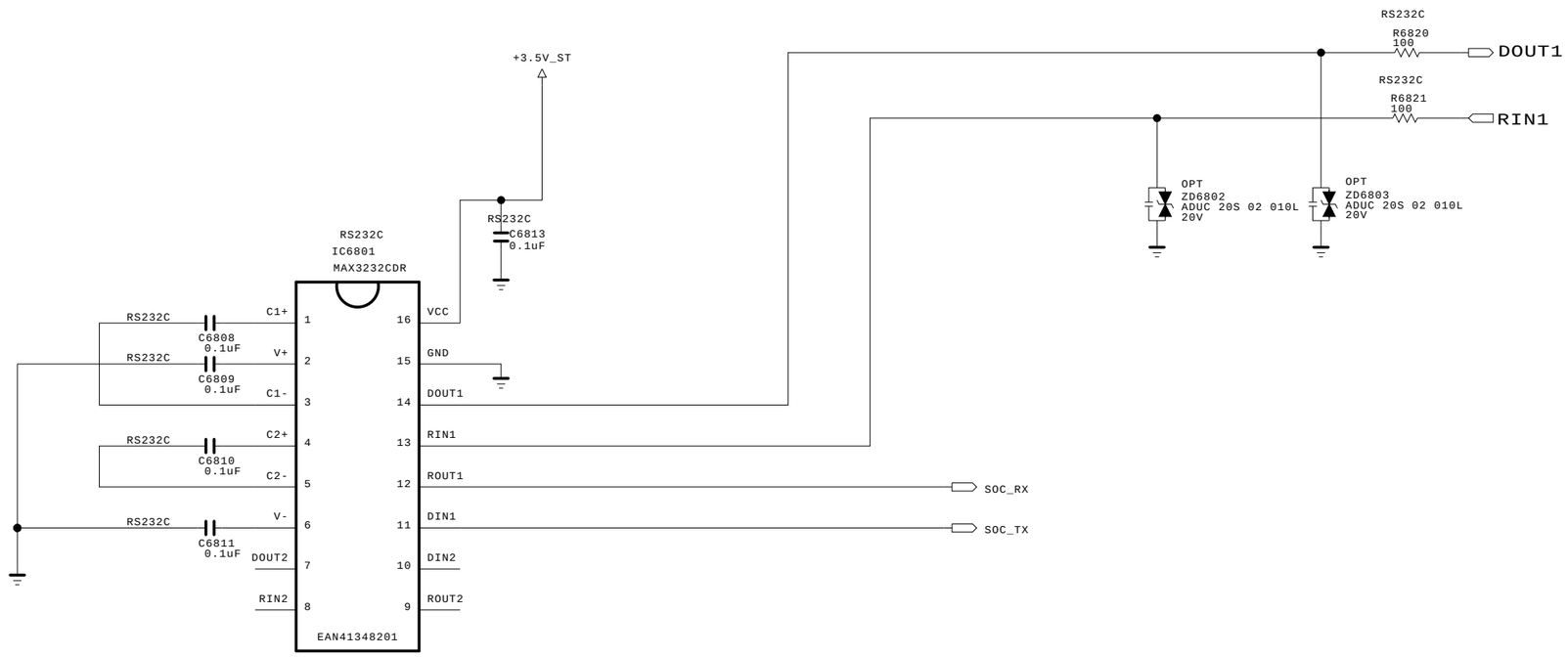

THE ⚠ SYMBOL MARK OF THIS SCHEMETIC DIAGRAM INCORPORATES SPECIAL FEATURES IMPORTANT FOR PROTECTION FROM X-RADIATION. FIRE AND ELECTRICAL SHOCK HAZARDS, WHEN SERVICING IF IS ESSENTIAL THAT ONLY MANUFACTURES SPECIFIED PARTS BE USED FOR THE CRITICAL COMPONENTS IN THE ⚠ SYMBOL MARK OF THE SCHEMETIC.

SECRET
LGElectronics

LG ELECTRONICS

MODEL	UF71/7500	DATE	2014-05-19
BLOCK	RS232C	SHEET	22

Copyright © 2015 LG Electronics. Inc. All rights reserved.
Only for training and service purposes

LGE Internal Use Only

[LM15U_ONLY]

CLIP Top Side for Covershield

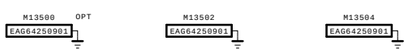

CLIP 1 - PUSH TYPE

SMD Top Side for Covershield

8.5T

To connect 28pin Wafer

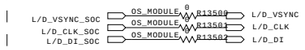

To connect 51P wafer

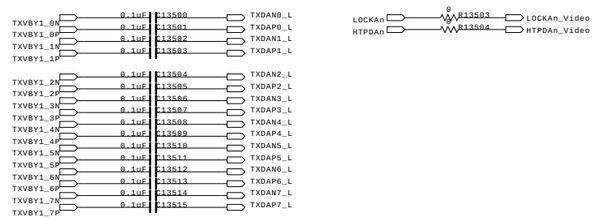

SMD bottom for ESD

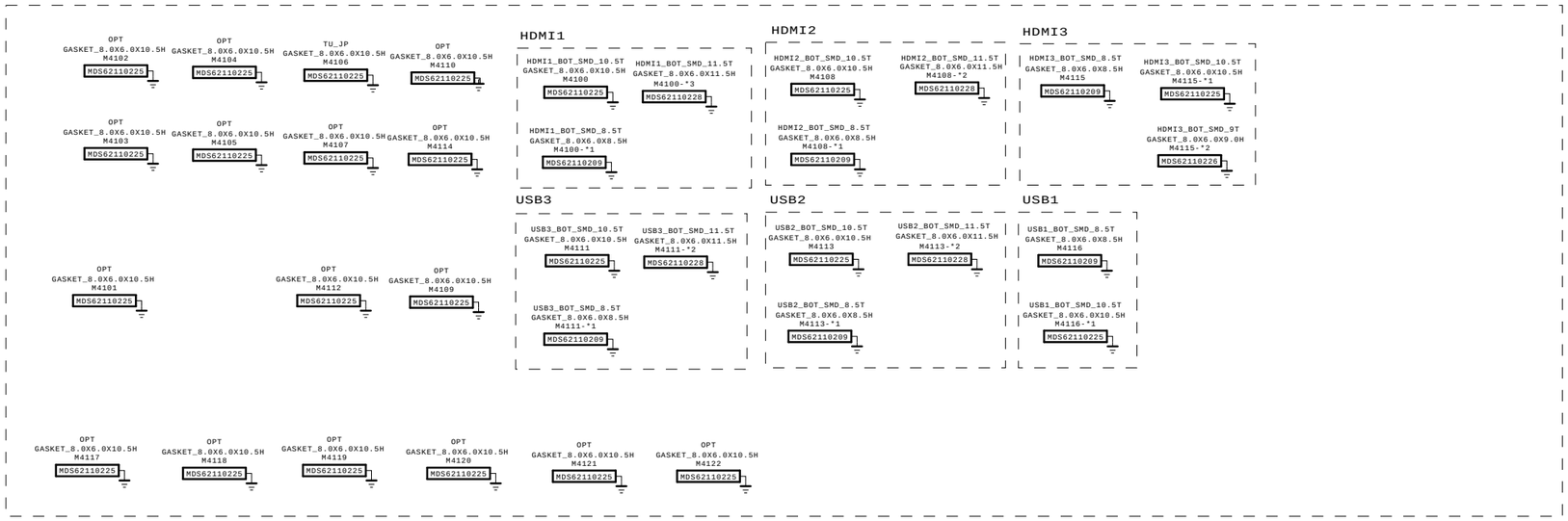

THE ⚠ SYMBOL MARK OF THIS SCHEMETIC DIAGRAM INCORPORATES SPECIAL FEATURES IMPORTANT FOR PROTECTION FROM X-RADIATION. FIRE AND ELECTRICAL SHOCK HAZARDS, WHEN SERVICING IF IS ESSENTIAL THAT ONLY MANUFACTURES SPECIFIED PARTS BE USED FOR THE CRITICAL COMPONENTS IN THE ⚠ SYMBOL MARK OF THE SCHEMETIC.

SECRET
LGElectronics

LG ELECTRONICS

MODEL	LM15U	DATE	2014-11-27
BLOCK	LM15U_ONLY	SHEET	135

Copyright © 2015 LG Electronics. Inc. All rights reserved.
Only for training and service purposes

LM15U ONLY, LM15U+URSA

TUNER EMS GND SEPERATION

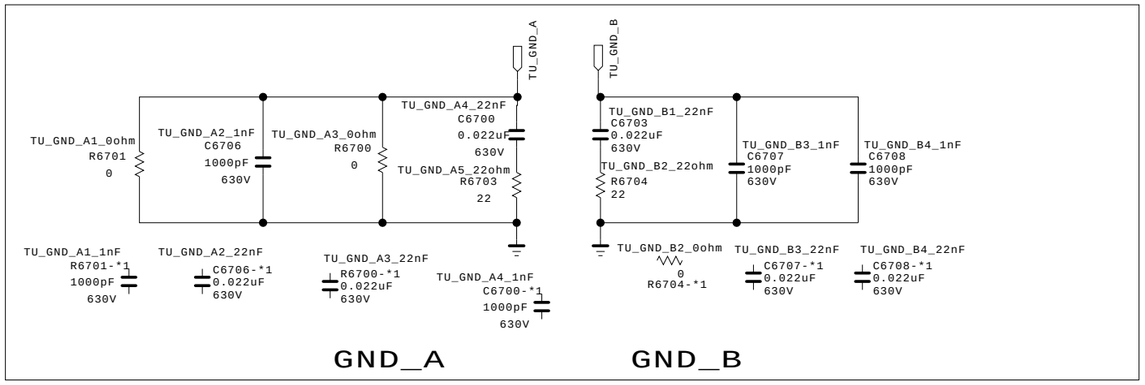

TU_GND_A	EU/CIS	AJJA	TW/COL	CN/HK	KR	North.AM	BR	JP
GND A_1	0 ohm	0 ohm			X	0 ohm	X	0 ohm
GND A_2	X	X			22 nF	X	22 nF	1 nF
GND A_3	X	0 ohm			X	0 ohm	22 nF	0 ohm
GND A_4	X	X			22 nF	X	22 nF	1 nF
GND A_5	X	X			22 ohm	X	22 ohm	22 ohm

TU_GND_B	EU/CIS	AJJA	TW/COL	CN/HK	KR	North.AM	BR	JP
GND B_1	X	X			22 nF	X	22 nF	X
GND B_2	X	X			22 ohm	X	22 ohm	X
GND B_3	1 nF	1 nF			22 nF	1 nF	22 nF	1 nF
GND B_4	1 nF	1 nF			22 nF	1 nF	22 nF	1 nF

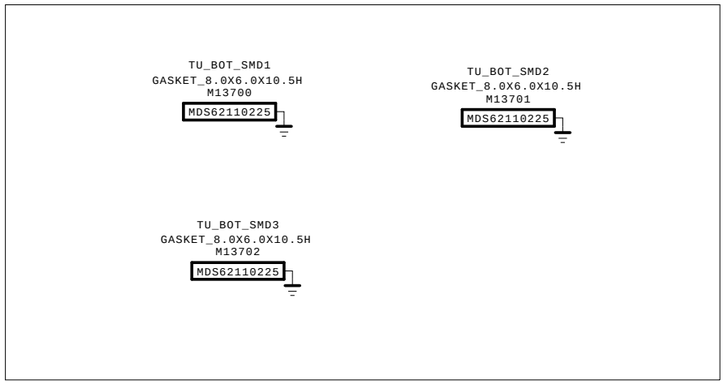

TU_BOT_SMD	EU/CIS	AJJA	TW/COL	CN/HK	KR	North.AM	BR	JP
SMD1								
SMD2								
SMD3								

THE ⚠ SYMBOL MARK OF THIS SCHEMETIC DIAGRAM INCORPORATES SPECIAL FEATURES IMPORTANT FOR PROTECTION FROM X-RADIATION. FIRE AND ELECTRICAL SHOCK HAZARDS, WHEN SERVICING IF IS ESSENTIAL THAT ONLY MANUFACTURES SPECIFIED PARTS BE USED FOR THE CRITICAL COMPONENTS IN THE ⚠ SYMBOL MARK OF THE SCHEMETIC.

SECRET
LGElectronics

LG ELECTRONICS

MODEL	LM15U	DATE	2014-11-11
BLOCK	Tuner_GND	SHEET	137

Copyright © 2015 LG Electronics. Inc. All rights reserved.
Only for training and service purposes

LGE Internal Use Only

LG

Life's Good